SigenStor-(8S–12S) Series Installation Guide



Version: 06
Release date: 2025-11-21



Caution

- Trained or experienced electrical personnel are required to operate the equipment.
- Operators should be familiar with national and local laws, regulations, and standards, and the compositions and operating principles of relevant systems.
- Please read carefully the operating requirements and precautions in this document and "Important Notice" before operating. Failure to do so may result in damage to the equipment that is not covered by the warranty.

1 Product Description

1.1 Model Designation

Model	Inverter model	EV DC Charging Module Model	Number of SigenStor BAT 5.0/6.0/8.0/10.0
SigenStor-8S(-EV12/25)-(5-54.24)	SigenStor EC 8.0 SP AU	**NA:** no SigenStor EV DC charging module get installed; **EV12:** SigenStor EVDC 12 7.5S2; **EV25:** SigenStor EVDC 25 7.5S2	1~6
SigenStor-10S(-EV12/25)-(5-54.24)	SigenStor EC 10.0 SP AU		
SigenStor-12S(-EV12/25)-(5-54.24)	SigenStor EC 12.0 SP AU		

1.2 Appearance and Dimensions

Without SigenStor EVDC Series

Tips

The preceding figure takes two SigenStor BATs as an example to show the appearance.

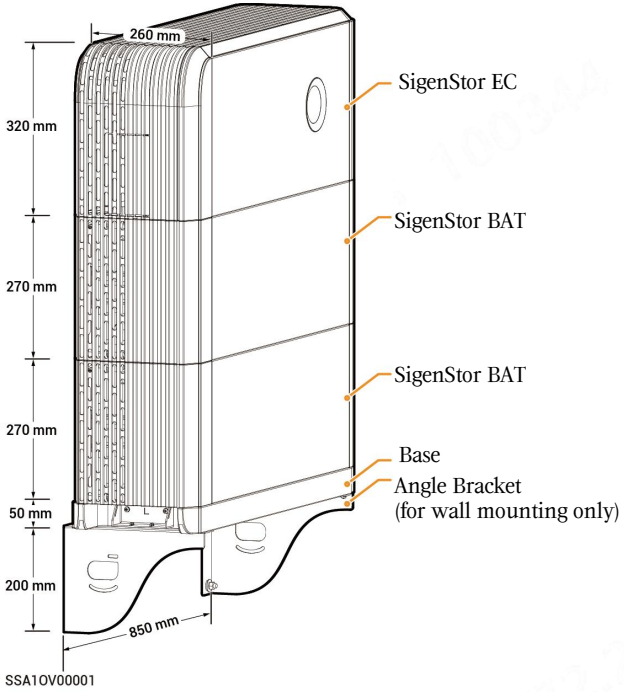

With SigenStor EVDC Series

Tips

The preceding figure takes one SigenStor BAT as an example to show the appearance.

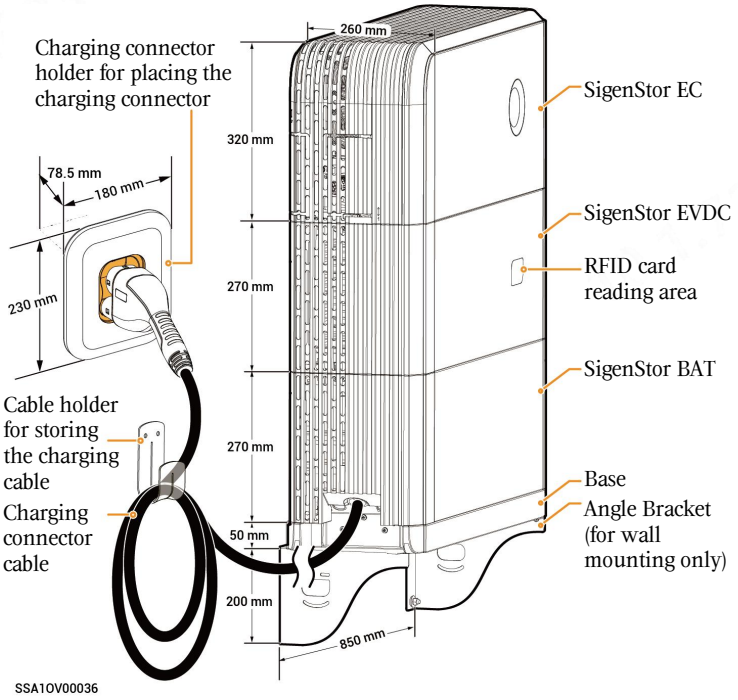

1.3 Port Descriptions

SigenStor EC Left View

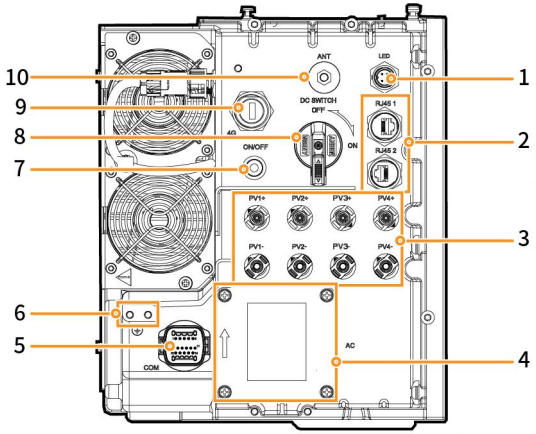

SHA1OV00003

S/N	Name	Marking
1	Decorative cover light strip connector	LED
2	Network interface	RJ45 1/ RJ45 2
3	DC input interface	PV1+/PV2+/ PV3+/PV4+/ PV1-/PV2- /PV3-/PV4-
4	AC output interface	AC
5	Communication interface	COM
6	Ground screw	-
7	Switch button	ON/OFF
8	DC switch	DC SWITCH
9	Sigen CommMod interface	4G
10	Antenna interface	ANT

Modular Floating Stacked Connector

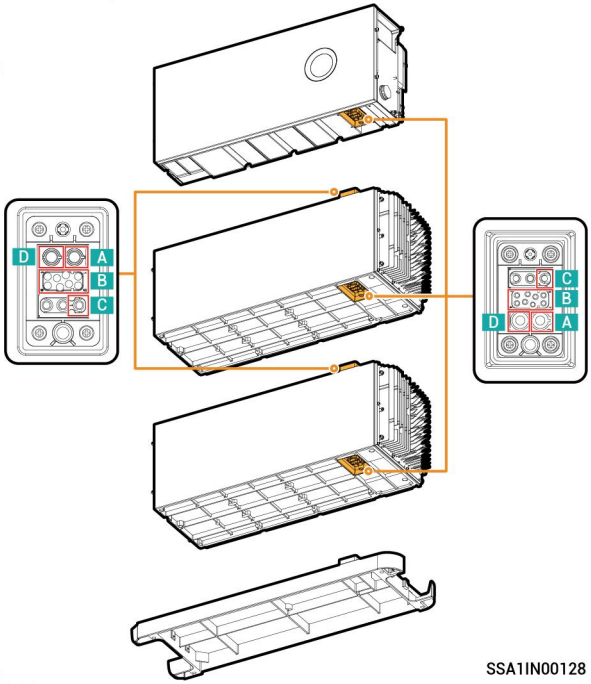

SSA1IN00128

No.	Meaning
A	BAT-
B	Communication interface
C	PE
D	BAT+

2 Pre-installation Check

- **Check whether the components are entirely supplied against the packing list and whether the appearance is in good condition. For any problem, contact your sales representative.**
- **Parts and accessories supplied with the packing box are personal assets of the owner and must not be taken away from the installation site.**
- **Check personal protective equipment and installation tools to ensure that they are complete; If not, please make them up.**
- **Check and ensure the completeness of personal protective equipment and installation tools; replenish if necessary.**

Protective equipment


Safety hat


Goggles


Dust mask


Protective gloves


Insulating gloves


Insulating shoes

Installation tool


Tape measure

Level

Marker

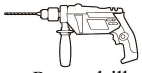
Power drill


Rubber mallet


Scissors


Cable tie


Wire stripper


Crimping pliers


Vacuum cleaner

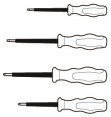
Insulation screwdriver set

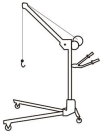
(Optional)Lift (used when SigenStor BAT ≥3 units)


(Optional) Stainless steel covered plastic steel rope (bearing: ≥250 kg Diameter: 3 mm)

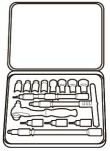
Insulation sleeve set

Torque socket wrench


(Optional) Lock (Lock bar diameter ≤ 5 mm)


Adjustable wrench

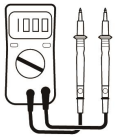
Multimeter


Hexagonal L-type wrench (4mm on opposite side)

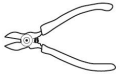
Wire cutter

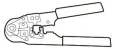
Network cable pliers

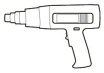
Heat gun


Heat shrinkable sleeve


Open-end wrench (model: H4TW0001 Manufacturer: Amphenol)


Crimping pliers (model: H4TC0003 Manufacturer: Amphenol)

Installer–provided cable

Caution

- **The specifications of the Installer–provided cable must comply with the cable regulations and standards of the country or region standards.**
- **L, N and PE should be connected to other equipment in sequence without mixing.**

S/N	Cable name	Recommended specifications
1	Protective ground cable	Outdoors single-core copper flexible cable Cross–sectional area of core conductor: 10 mm²;
2	AC cable	Outdoor three-core copper flexible cable (L, N, PE) • SigenStor-(8S–10S) series: Cross–sectional area of core conductor: 10 mm²; Outer diameter: 16–20 mm , the minimum insulation temperature rating： 90 ℃ • SigenStor-12S series: Cross–sectional area of core conductor: 16 mm²; Outer diameter: 16–20 mm , the minimum insulation temperature rating： 90 ℃
3	Signal cable	Outdoor shielded twisted pair Cross–sectional area of core conductor: 0.5–0.75 mm² (multi–core flexible conductor, Tubular terminal needed); 0.5–1 mm² (single–strand hard conductor, no tubular terminal needed) Outer diameter: 4.5–6.5 mm Cable length: ≤ 1000 m Baud rate: ≤ 9600 bps
4	RJ45 network cable	Outdoor eight–conductor shielded twin–twisted pair cable Cross–sectional area of core conductor: 0.13–0.2 mm²; Outer diameter: 4–7.5 mm Single cable length: ≤ 100 m[1]
5	DC input cable	Outdoor photovoltaic cable Cross–sectional area of core conductor: 4–6 mm²; Outer diameter: 4.5–7.8 mm

Note [1]: The cable length should be limited for good communication. Too long cable degrades the communication effect.

Tips

Recommended specifications for cables connecting power sensors to Distribution panel and to the grid, as well as step-by-step instructions for wiring, can be found in the accompanying documentation for each respective model.

3 Site Requirements

Tips

- **The equipment can be installed indoors and outdoors. Install the equipment in strict accordance with installation instructions given in this section and local laws and regulations.**
- **Before installing the equipment, please be sure to carefully read the following installation requirements. The company will not be liable for any functional abnormalities or damages arising from the operation of the equipment if the installation requirements are not followed, even in cases leading to personal safety incidents.**
- **During actual installation, the selection of the installation location should comply with local regulations, firefighting regulations, and other relevant laws. The specific installation location planning should be subject to the installer or engineering, procurement, and construction (EPC) contracts.**

Installation Environment

- Do not install the equipment in a smoky, flammable, or explosive environment.
- Avoid exposing the equipment to direct sunlight, rain, standing water, snow, or dust. It is suggested to install the equipment in a sheltered place. Take preventive measures in operating areas prone to natural disasters such as floods, mudslides, earthquakes, and typhoons.
- Do not install the equipment in an environment with strong electromagnetic interference.
- The temperature and humidity of the installation environment should meet equipment requirements.
- The equipment should be installed in an area that is at least 500 m away from corrosion sources that may result in salt damage or acid damage. Corrosion sources include but are not limited to seaside, thermal power plants, chemical plants, smelters, coal plants, rubber plants, and electroplating plants.
- In areas with good marine environments (such as Norway, where the nearshore salinity is ≤ 28 psu), the mounting distance of the device from the coastline can be appropriately relaxed to ≥ 200 m.
- If the outer surface of the device is damaged, please repaint the device in time.

Installation Location

- Do not tilt the equipment or place it upside down. Ensure that the equipment is horizontally installed.
- Do not install the equipment in areas easily accessible to children.
- Do not install the equipment in a place with fire hazards or is prone to moisturizing.
- The equipment produces sound when it is operating. Please install the equipment in a place with appropriate distance at which there is no impact to daily work and life.
- Do not install the equipment in a sealed, poorly ventilated location without fire protection measures and inaccessible for firefighters.
- The equipment is hot when it is operating. If the equipment is installed indoors, please ensure good indoor ventilation and avoid significant indoor temperature rise by more than 3° C while the equipment is operating. Otherwise, the equipment will be derated.
- Do not install the equipment in mobile scenarios such as recreational vehicles, cruise ships, and trains.
- It is recommended to install the equipment in a location where you can easily access, install, operate, and maintain it, and view the indicator status.
- Do not place the equipment in the vehicle passage when installed in a garage to avoid collisions.

Installation Base

- Do not install the equipment on a flammable base. If this cannot be avoided, add a fire barrier between the equipment and the base.
- The installation base should meet the load-bearing requirement. Solid brick-concrete structures, concrete walls, and floors are recommended.
- The installation base should be flat, and the installation area should meet the installation space requirements.
- No plumbing or electrical alignments are allowed inside the installation base to avoid potential drilling hazards during equipment installation.
- The equipment base is made of aluminum. If the equipment is installed on a metallic substrate that is prone to electrochemical corrosion (such as high-chromium stainless steel, austenitic stainless steel, and nickel-plated steel), insulating gaskets must be fully installed between the equipment and the substrate. (Non-metallic insulating gaskets such as PC, PTFE, or PVDF can be used)

Tips

To ensure optimal performance of the device, it is suggested that the installation distance between the device and surrounding obstacles be planned with reference to the diagram. If the installation site is well-ventilated, the optimal solution may be deployed based on actual conditions.

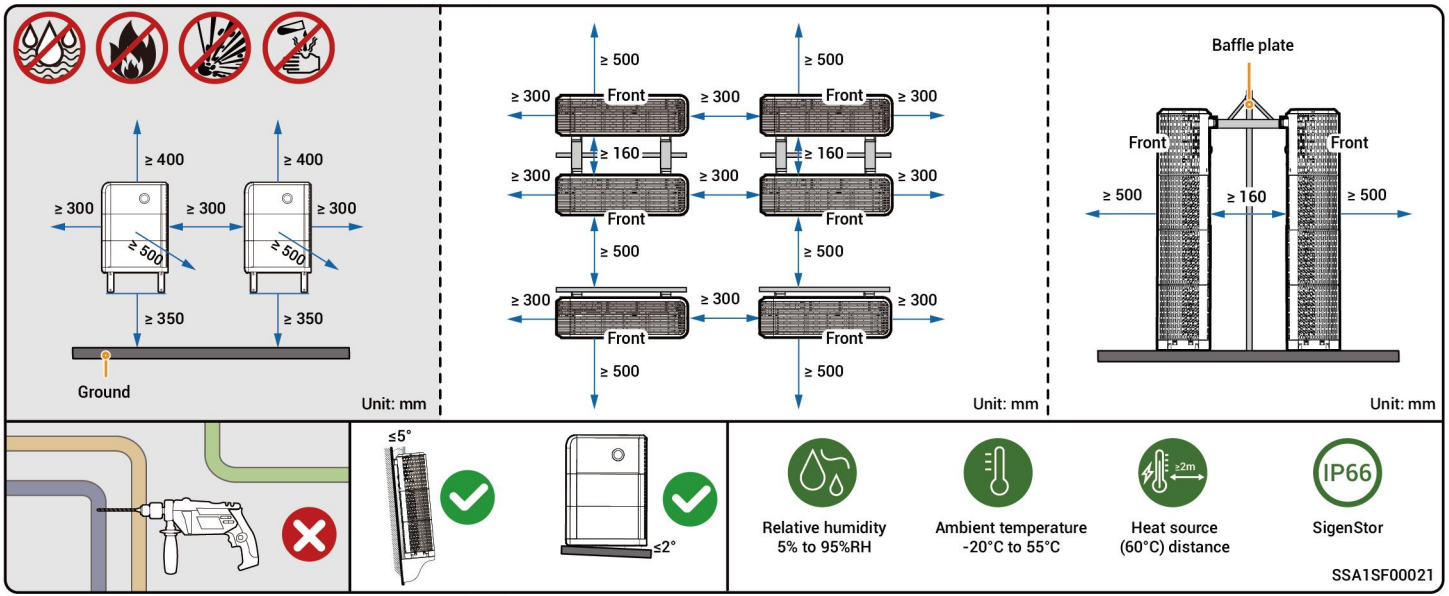

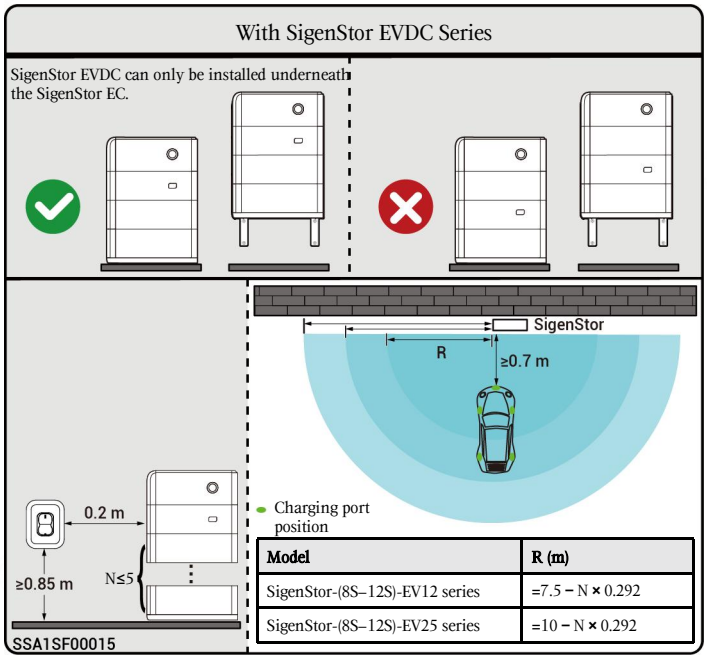

Model	R (m)
SigenStor-(8S–12S)-EV12 series	=7.5 − N × 0.292
SigenStor-(8S–12S)-EV25 series	=10 − N × 0.292

Tips

- For models with SigenStor EVDC series, please install it near the parking space. For installation distance, refer to the illustrations.
- There will be errors in the actual distance under different installation environments, and the figure is for reference only.

4 Installation of inverter and battery pack

Tips

- Floor mounting supports up to six SigenStor BATs or five SigenStor BATs plus one SigenStor EVDC.
- Wall mounting: When made of solid bricks, concrete, or similar materials, walls can be installed with up to two SigenStor BATs or two SigenStor BATs plus one SigenStor EVDC. Wooden walls can be installed with up to two SigenStor BATs or one SigenStor BAT plus one SigenStor EVDC.
- When installing three or more SigenStor BATs on the floor, use Lift.
- Multiple SigenStor BATs can be installed onsite based on the actual configuration.
- If the floor is prone to stagnant water, please set up a waterproofing platform or install it on the wall.
- The equipment is heavy, do not slip off when handling the equipment to avoid the equipment falling and injuring the operator.
- SigenStor BAT is forbidden to be used after falling, please buy a new one.
- Do not drag the equipment during installation.

4.1 Floor Installation

Tips

- If the ground is uneven, leveling plates or adjustable feet can be used for leveling, depending on the product received.
- If the installation package the owner receives contains no adjustable feet, only leveling plates can be used for leveling. If both are available, either leveling tool can be used. Please install the equipment according to the actual needs of the owner.
- Please avoid using adjustable feet for leveling in earthquake-prone areas.

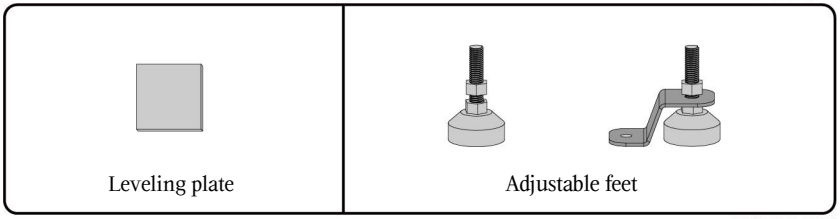

SSA1OV00034

1

Leveling with leveling plates

Tips

If the bubble level is not centered, use a leveling plate to adjust.

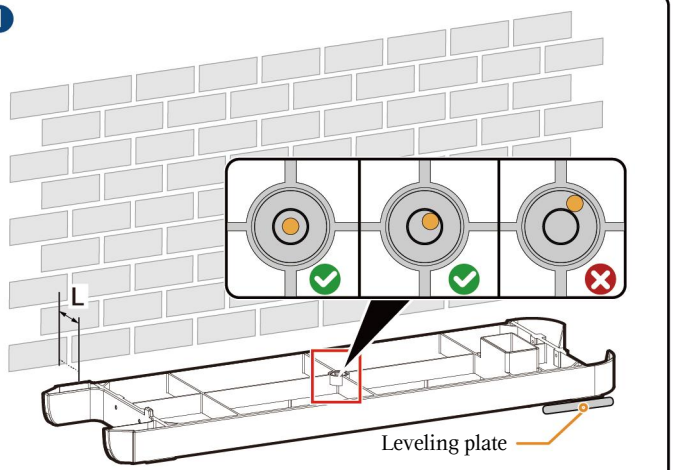

SigenStor BAT	L
≤2	L ≥ 35 mm
3 to 6	35 mm ≤ L ≤ 65 mm

SSA1IN00156

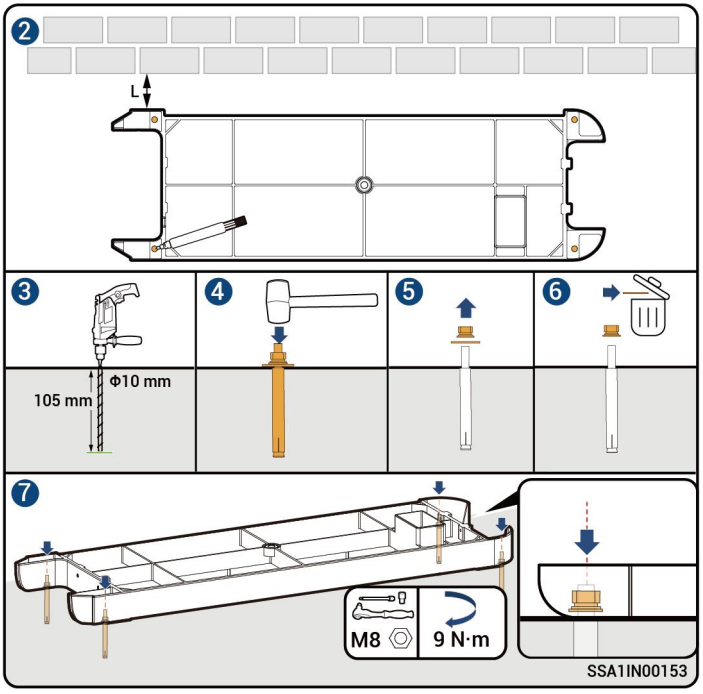

SSA1IN00153

Leveling with adjustable feet

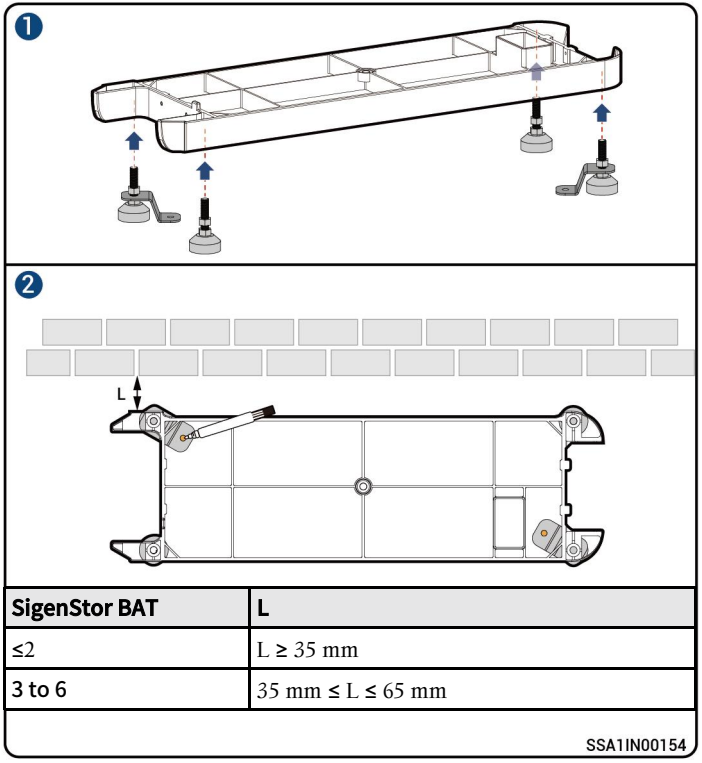

SigenStor BAT	L
≤2	L ≥ 35 mm
3 to 6	35 mm ≤ L ≤ 65 mm

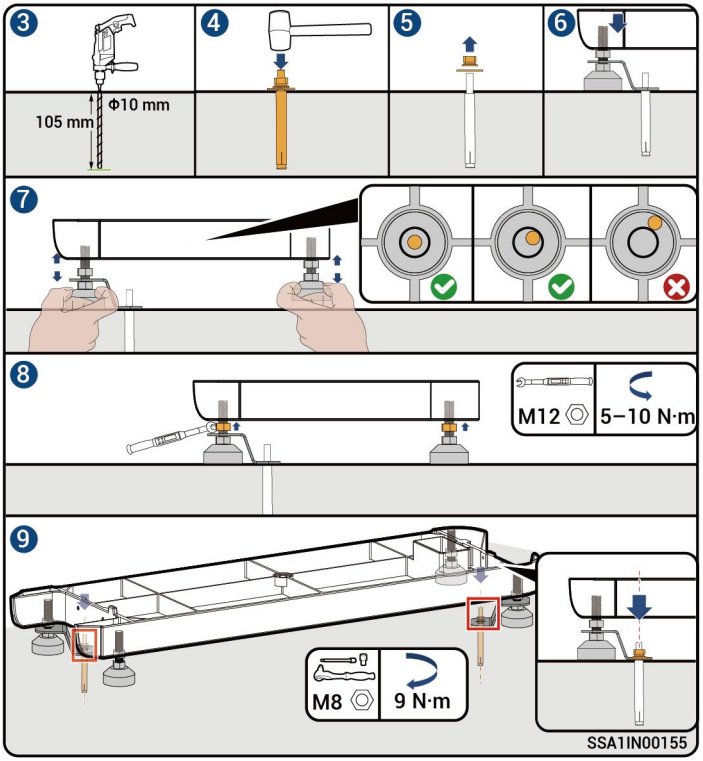

2 INV1 is the mounting hole on the left side of the inverter for wall installation, while INV2 is the mounting hole on the right side for wall installation.

Calculation formula for punch height (L1 and L2 should be measured from the upper surface of the base)	
Without SigenStor EVDC Series	With SigenStor EVDC Series
L1= ***N*** x 270 mm + 261 mm ± 3 mm **L2=** ***N*** x 270 mm + 254 mm ± 3 mm **N** is the number of SigenStor BATs and **N** ranges from 3 to 6.	**L1=** ***n*** x 270 mm + 270 mm + 261 mm ± 3 mm **L2=** ***n*** x 270 mm + 270 mm + 254 mm ± 3 mm **n** is the number of SigenStor BATs and **n** ranges from 3 to 5.

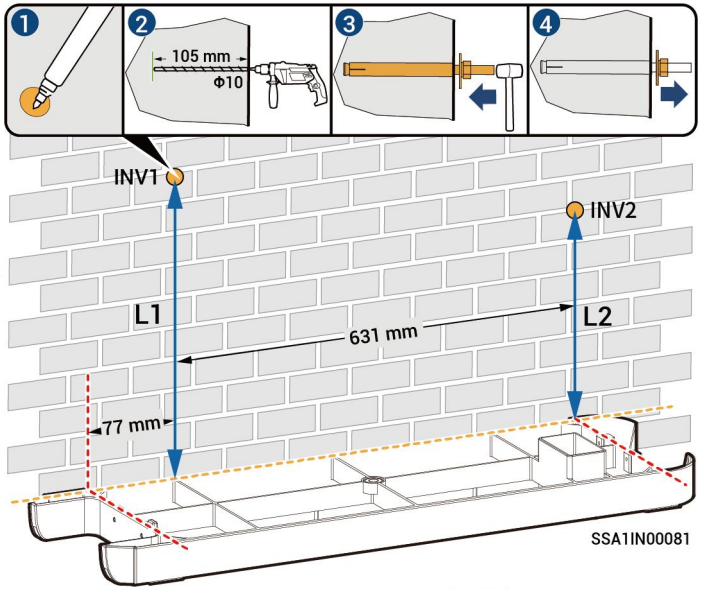

3 Before installing the handle, please use a Torque socket wrench to measure the screws and confirm that the screws on Sigen BAT are securely tightened with a torque of 4.5 N·m (± 0.45 N·m).

Caution

- Use the new handle supplied with the inverter for your installation operation.
- The "OUT" lettering on the handle must face outwards.
- Do not use a handle with stoppers that fell off or damaged for your installation operation. (Including but not limited to rust, paint peeling, deformation, and fracture)
- The handle is a personal asset of the owner. After use, it must be handed over to the owner for future use and must not be taken away from the installation site.
- The handle shall not be used more than 100 times. The handle that exceeds the use limits shall be scrapped.

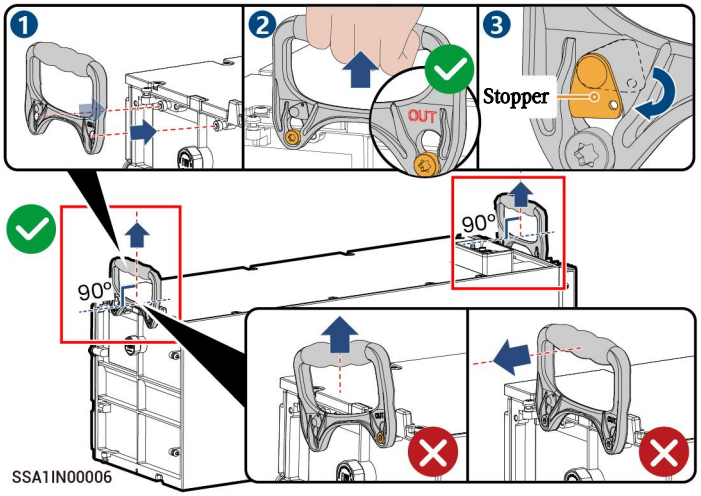

4 SigenStor BAT is kept horizontally and mounted vertically downwards.

SigenStor BAT≤ 2

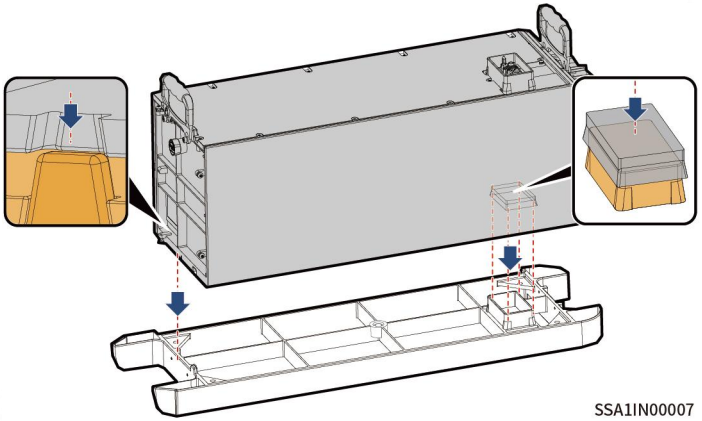

SigenStor BAT ≥ 3

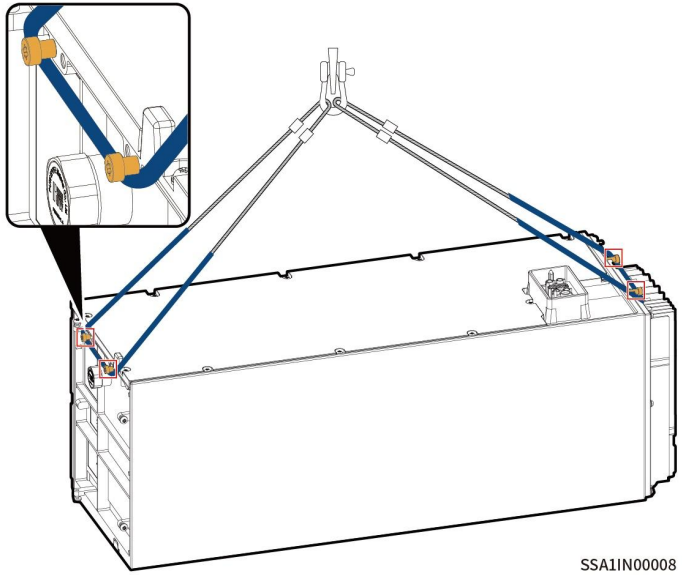

Tips

During lifting operations, the area where the sling comes in contact with the equipment should be wrapped with a protective layer to avoid damage to the equipment.

5 For models with SigenStor EVDC series, place SigenStor EVDC.

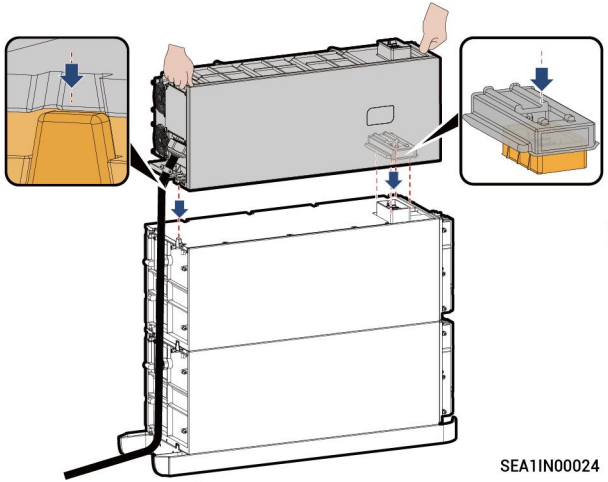

6 For information on how to place SigenStor EC, please refer to step 4 .

Tips

SigenStor EVDC 12 7.5S2 is initial set as 12.5kW DC output, but support to be upgrade to 25kW DC output by buying and activating software license.

For specific instruction for how to buy the license, please refer to mySigen App Installer Manual.

7

Without SigenStor EVDC Series

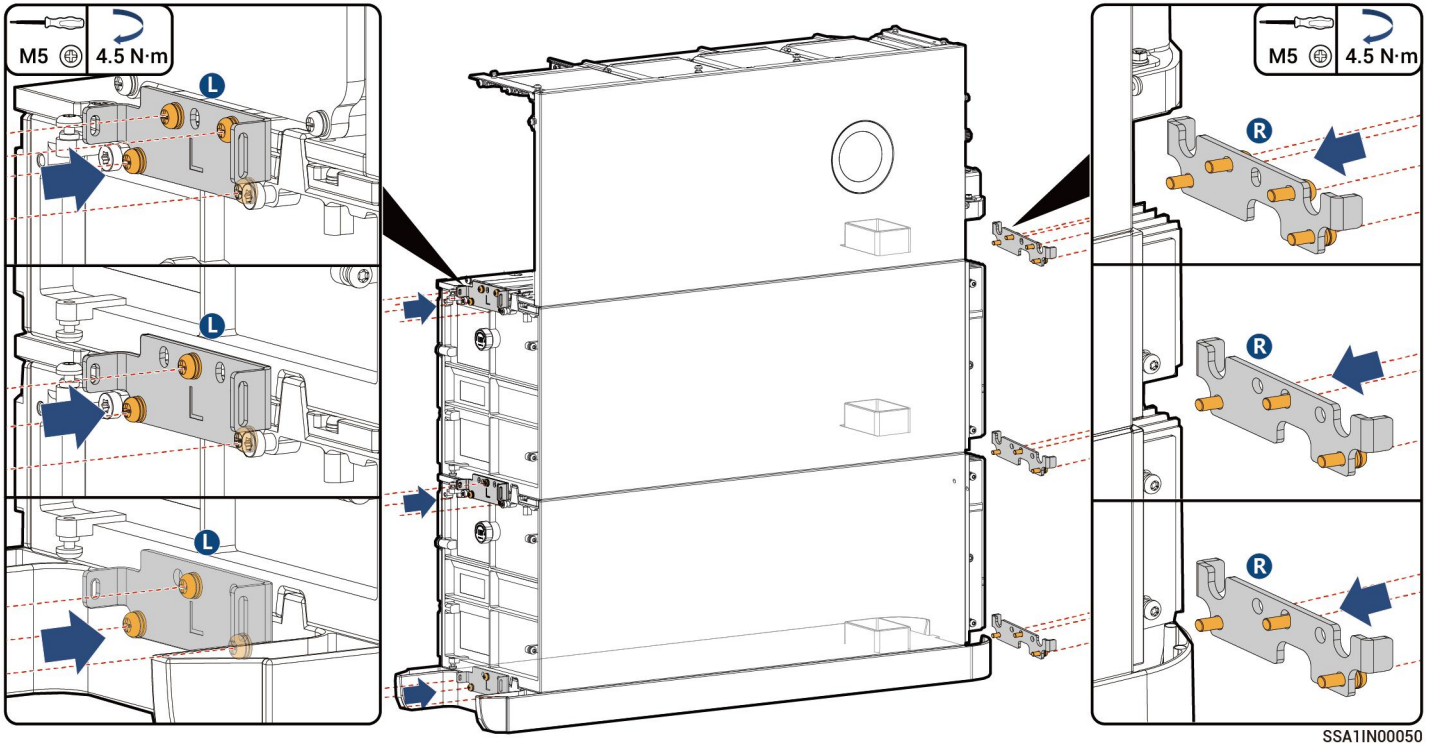

With SigenStor EVDC Series

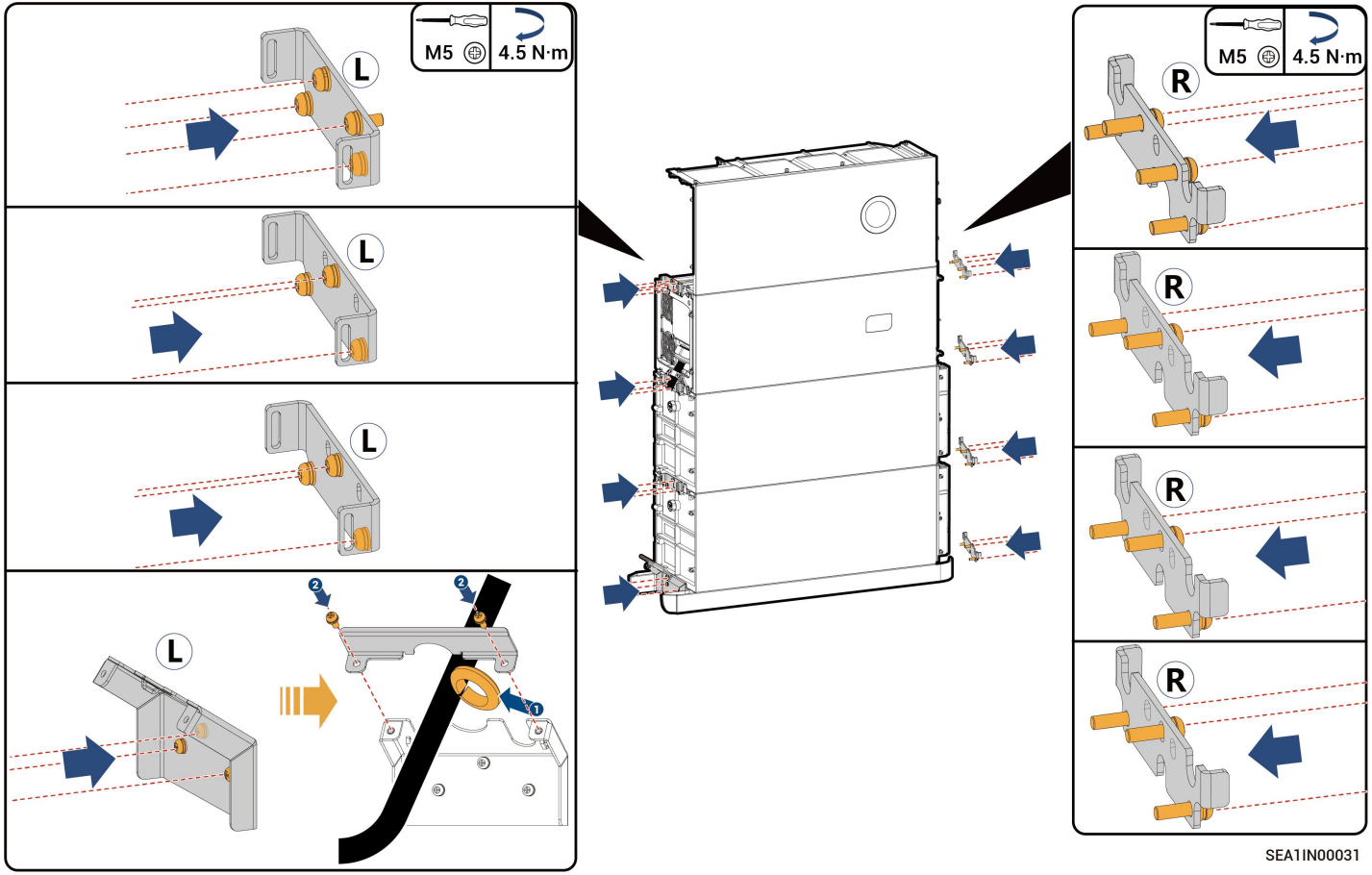

With SigenStor EVDC Series

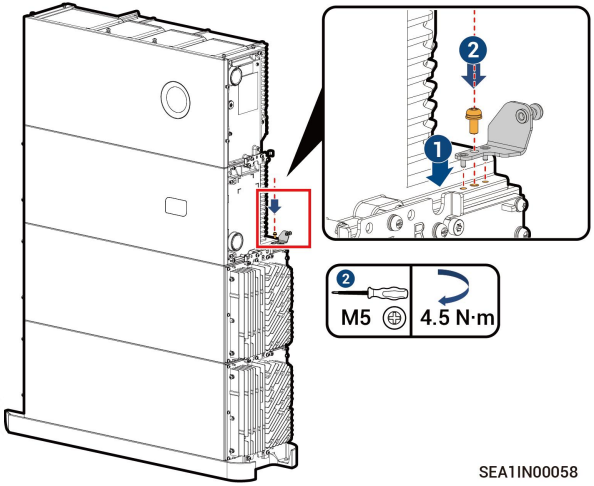

8 3 4 are optional steps. Simply installing the left-side inverter padlock can help prevent theft of the equipment.

SigenStor BAT ≥ 3

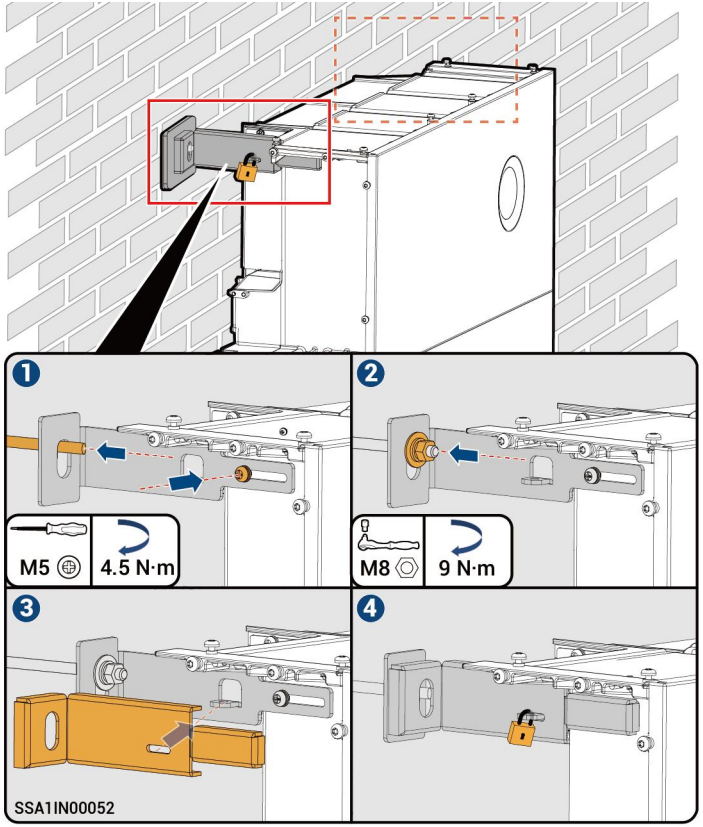

4.2 Wall Mounting

Wall scenes, such as solid bricks and concrete

1

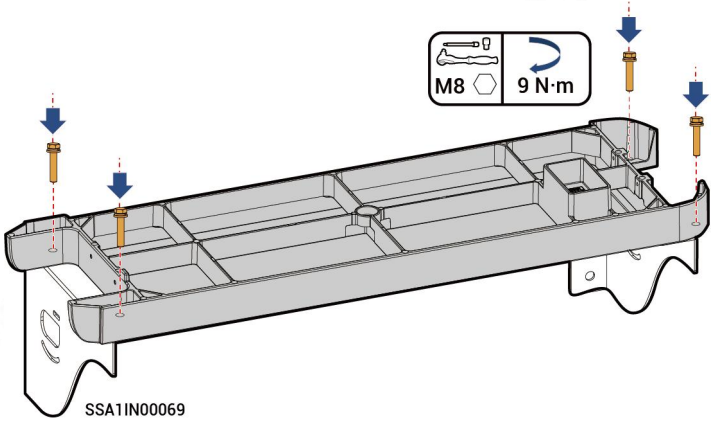

2

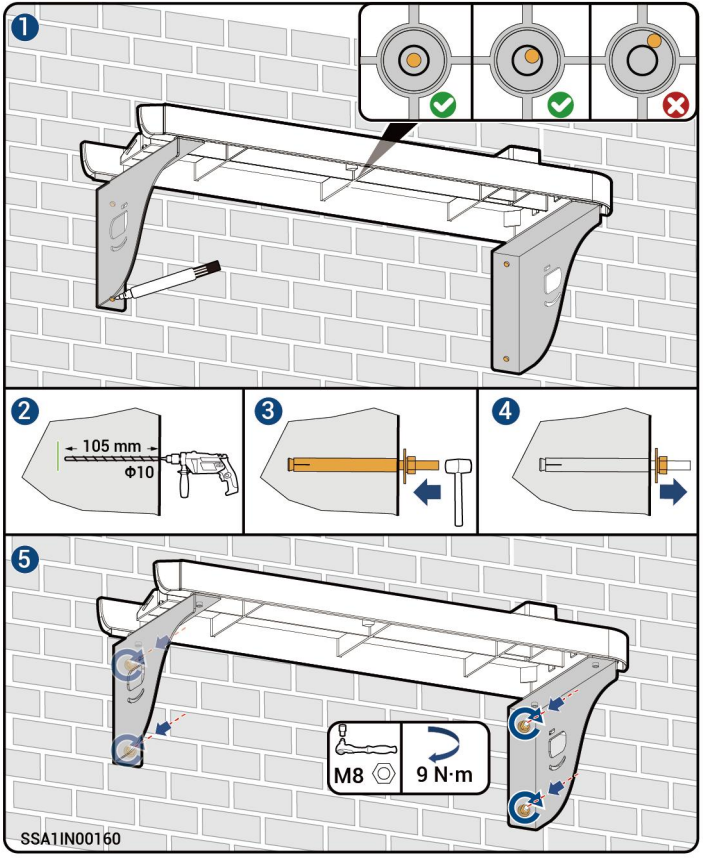

3

Calculation formula for punch height (L1 and L2 should be measured from the upper surface of the base)	
Without SigenStor EVDC Series	With SigenStor EVDC Series
L1= *N* x 270 mm + 261 mm ± 3 mm L2= *N* x 270 mm + 254 mm ± 3 mm	L1= *N* x 270 mm + 270 mm + 261 mm ± 3 mm L2= *N* x 270 mm + 270 mm + 254 mm ± 3 mm

Note: *N* is the number of SigenStor BATs and *N* is 1 or 2.

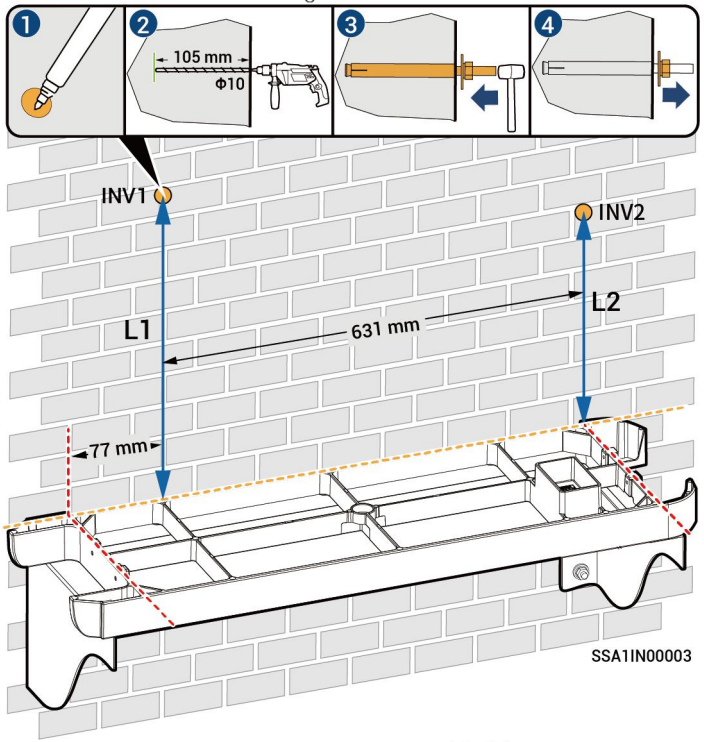

4 For details about how to place the SigenStor BAT, see Steps 3 4 in Section *4.1 Floor installation.*

5 For models with SigenStor EVDC series, please refer to Step 5 in *Section 4.1 Floor Installation* for placing the SigenStor EVDC.

6 For details about how to place the SigenStor EC, see Steps 6 in Section *4.1 Floor installation.*

7 For the installation of the Base bracket , please refer to Step 7 *Section 4.1 Floor Installation.*

8 For the installation of the fasteners for a wall-mounted inverter, please refer to Step 8 in Section *4.1 Floor installation.*

1

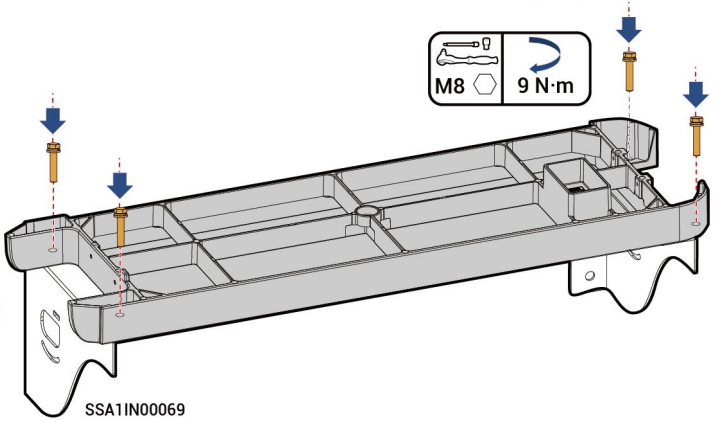

SSA1IN00069

2

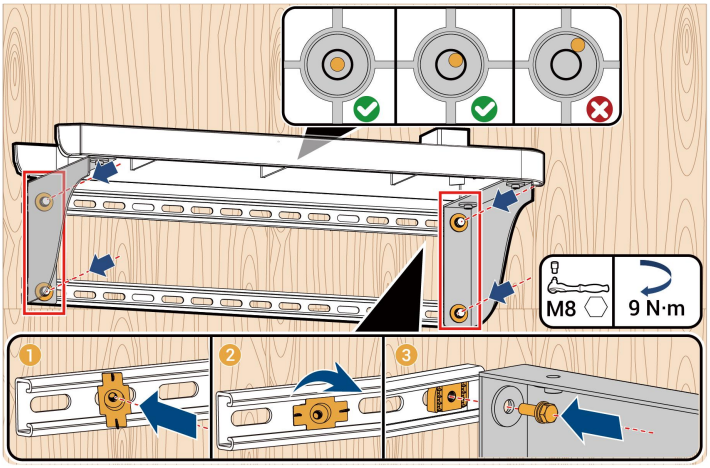

SSA1IN00167

3

Calculation formula for punch height	
Without SigenStor EVDC Series	With SigenStor EVDC Series
L=335.5 mm + ***N***(***N*** ≤ 2) x 270 mm ± 3.5 mm	L= 335.5 mm + 270 mm + 270 mm ± 3.5 mm

Note: ***N*** is the number of SigenStor BATs and ***N*** is 1 or 2.

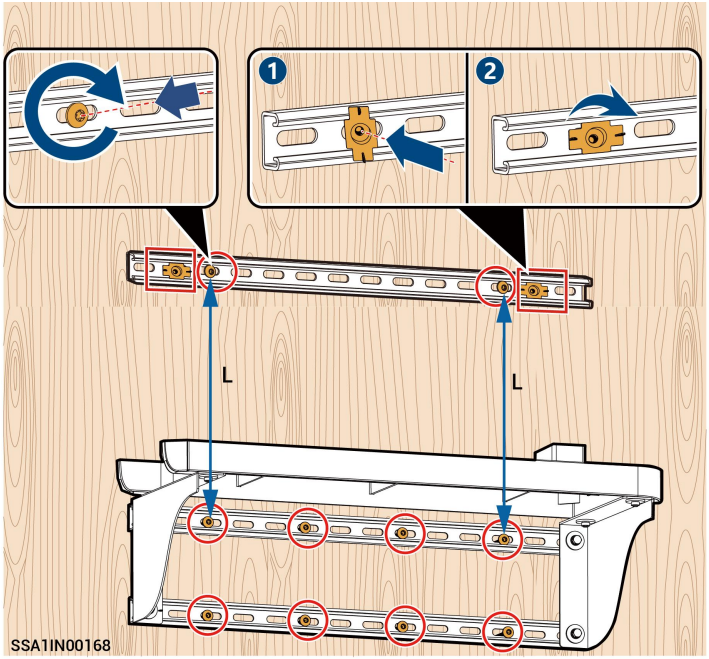

4 For details about how to place the SigenStor BAT, see Steps 3 4 in Section *4.1 Floor installation.*

5 For models with SigenStor EVDC series, please refer to Step 5 in *Section 4.1 Floor Installation* for placing the SigenStor EVDC.

6 For details about how to place the SigenStor EC, see Steps 6 in Section *4.1 Floor installation.*

7 For the installation of the Base bracket , please refer to Step 7 *Section 4.1 Floor Installation.*

8 For the installation of the fasteners for a wall-mounted inverter, please refer to Step 8 in Section *4.1 Floor installation.*

5 Cable Connection and Component Installation

Danger

- Before connecting cables, ensure that DC SWITCH is in the OFF state, and the front switch of the AC line is off.
- Do not perform operations on the equipment with power on. Before operation, please make sure all power supplies to the equipment have been disconnected, including but not limited to the grid side, inverter and diesel generator power switches.
- Do not leave construction residues, for example, cut cores of cables, in or around the equipment, such as, in terminals and in or around fans.

5.1 Connection Relationships

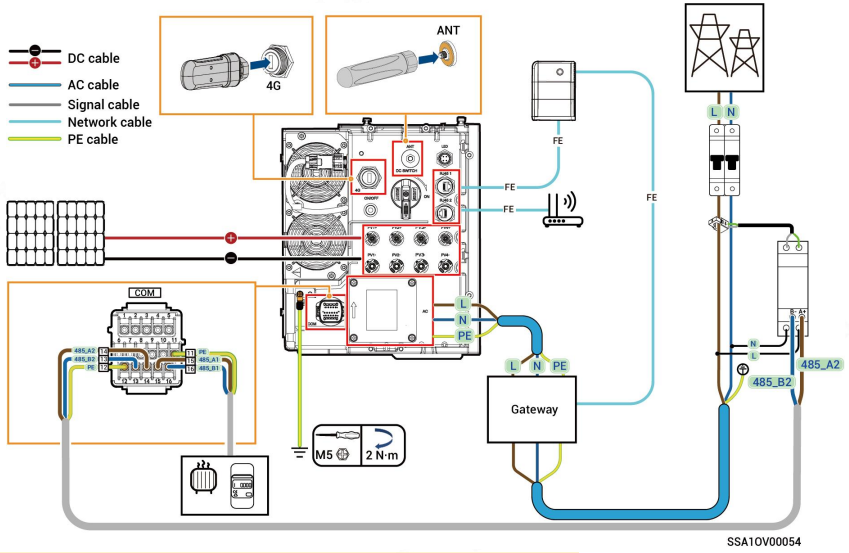

AC Switch Requirement
The rated voltage of the AC switch connected to each inverter should be ≥ 240 Va.c., and the rated current is recommended:
SigenStor EC/Sigen Hybrid 8.0 SP: The rated current is 50 A
SigenStor EC/Sigen Hybrid (10.0-12.0) SP: The rated current is 63 A

5.2 Recommended Cabling installation

Tips

- The cable colors in the figure are used only to distinguish different lines. The cable colors are based on actual conditions.
- Bind the power cable separately from the signal cable.
- There are three routing schemes, Select them based on the actual situation.
- PVC wiring ducts or PVC conduits are recommended to wrap cables outside decorative parts. 60 × 50 mm PVC wiring ducts are recommended and PVC conduits with diameter not less than Φ80 are recommended.

Scheme I

AC cable

Signal cable

Protective ground cable

Nerwork cable

DC cable

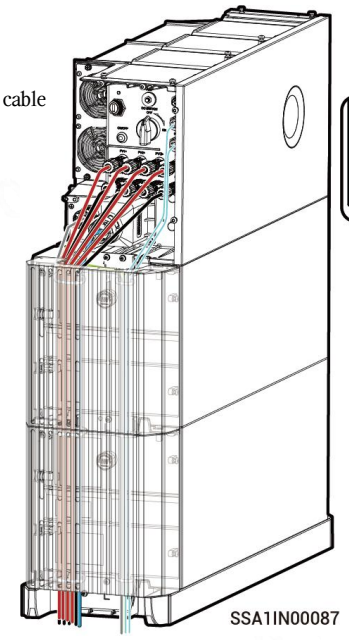

Scheme II

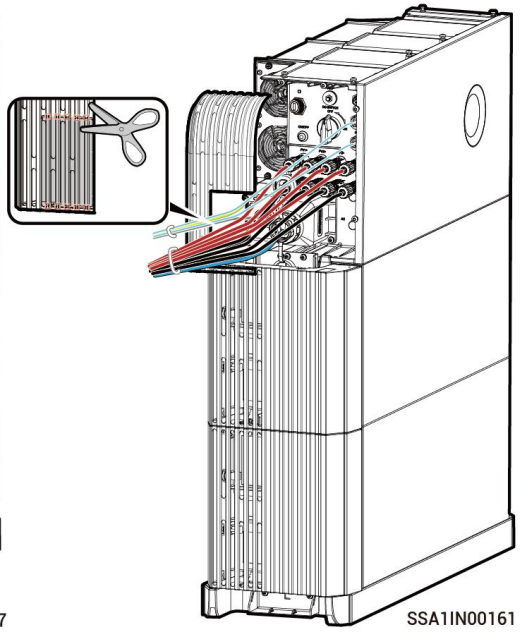

Scheme III

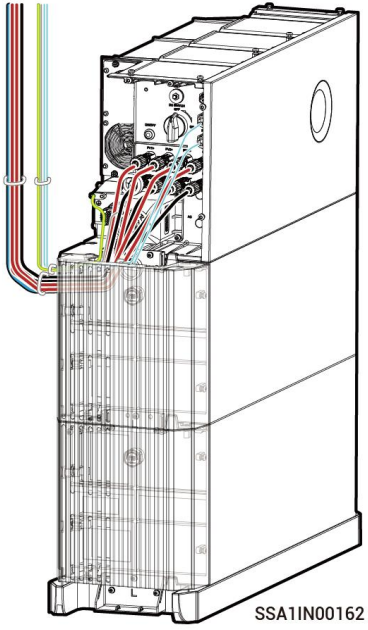

5.3 Protective Ground Cable Connection

Tips

The protective ground wire should be grounded in close proximity.

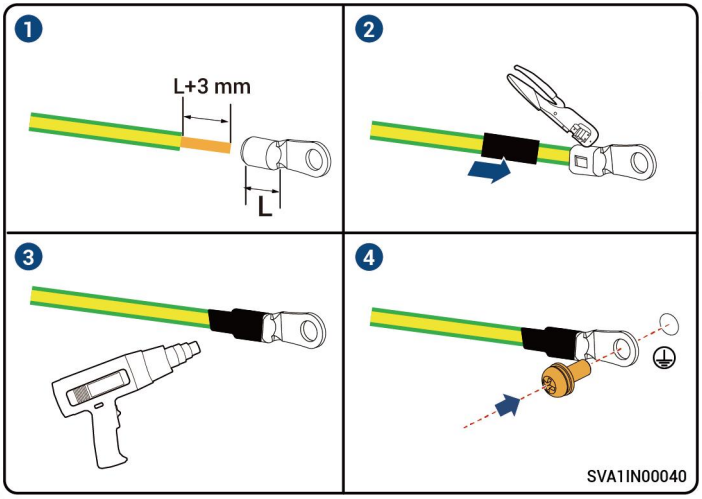

5.4 AC Output Cable Connection

Tips

The AC interface on the inverter is available in three appearances, Please select the appearance as needed.

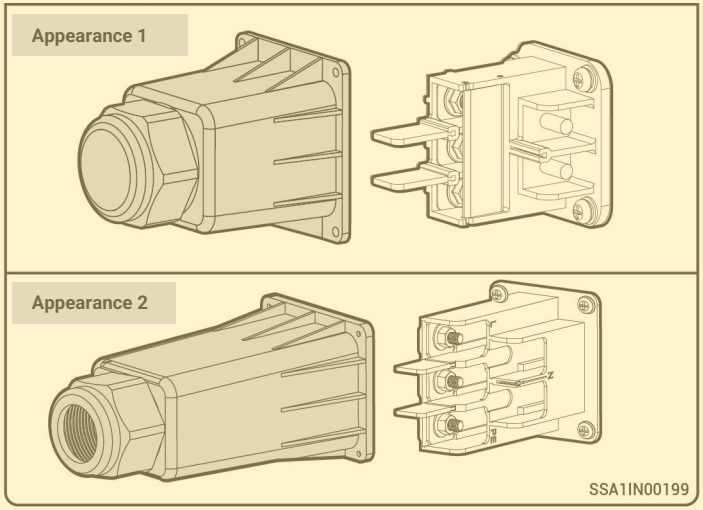

Appearance 1

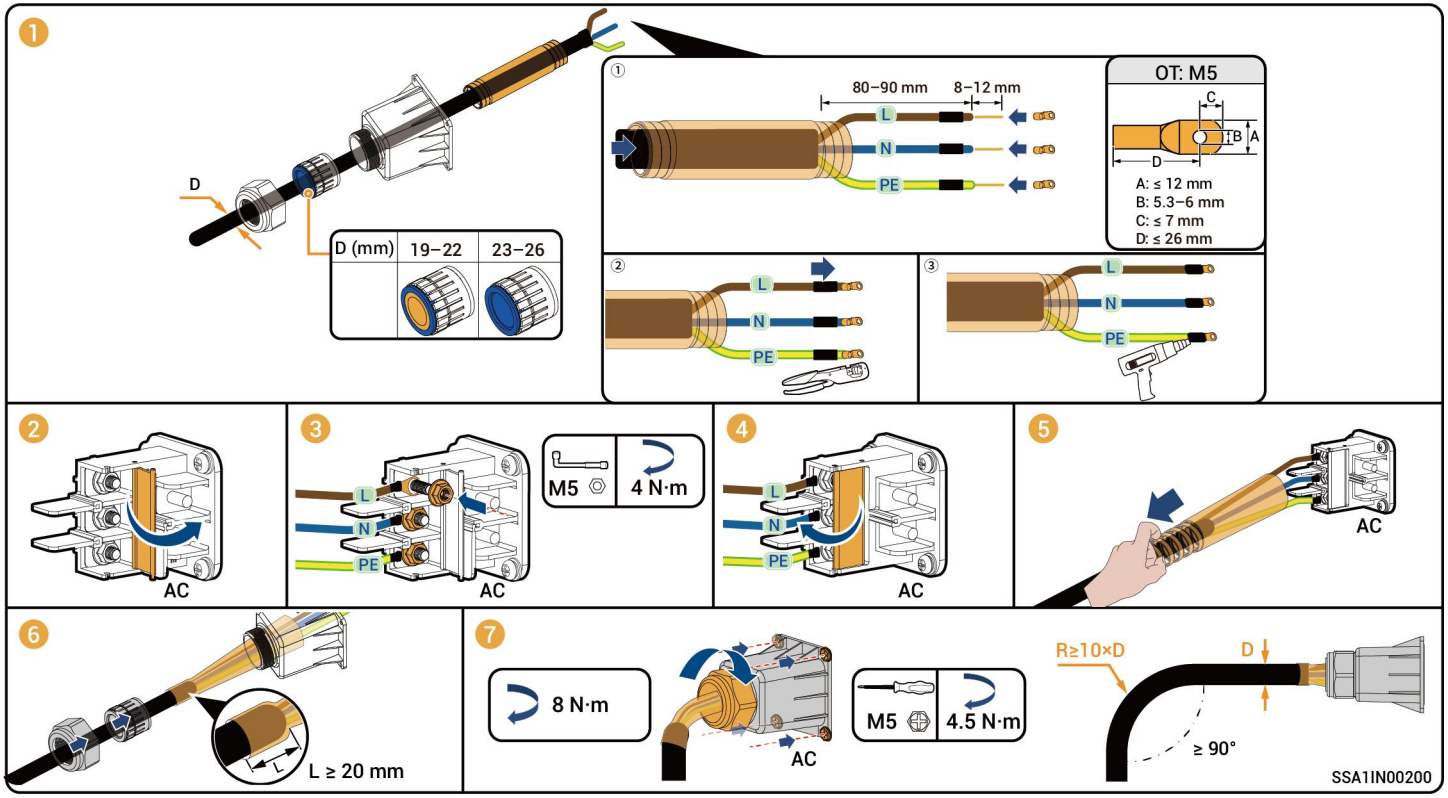

Appearance 2

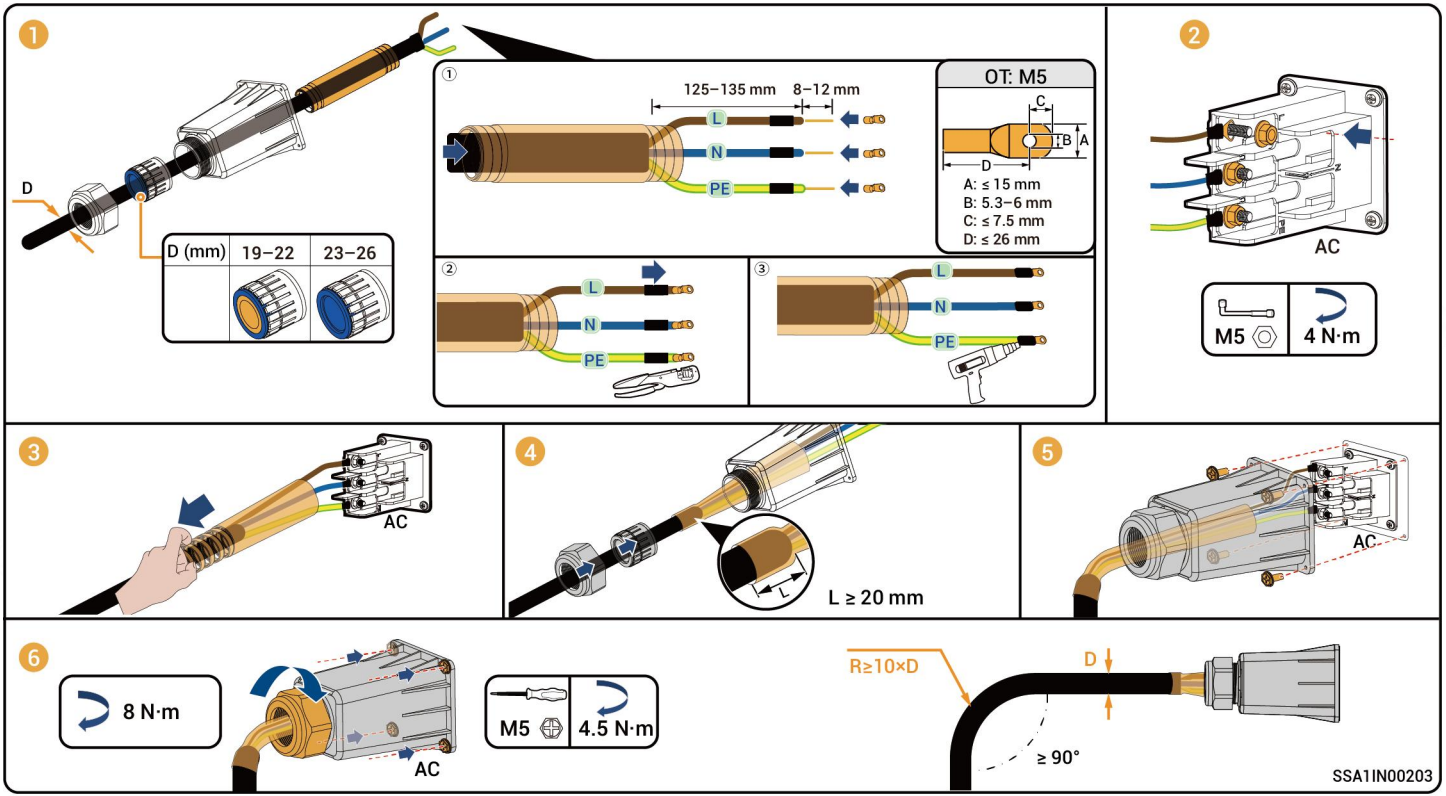

5.5 Signal cable Connection

Tips

- Power sensors need to be purchased from our official channel.
- The appearance and specific wiring of the power sensor can be found in the instruction manual delivered with the case.
- According to AS/NZS 4777.2:2020+A1:2021, connecting SigenStor to the power grid must meet the Demand Response Mode (DRM) function, of which DRM0 is mandatory.

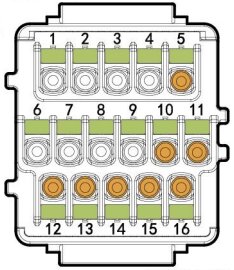

SSA1IN00020

5.5.1 COM terminal introduction

Description	Pin Definition		Pin Number	Sigen Sensor SP–DH (SDM230Modbus)	Sigen Sensor SP–CT120–DH (SDM120CT 40mA)
(Reserved) DO1, connected to third party intelligent electric equipment, such as switch control and heat pump	DO1-COM	Dry contact 1-Common	1	–	–
	DO1-NO	Dry contact 1-Normal Open	2	–	–
(Reserved) DO2, connected to third party intelligent electric equipment, such as switch control and heat pump	DO2-COM	Dry contact 2-Common	3	–	–
	DO2-NO	Dry contact 2-Normal Open	4	–	–
(Reserved) For power scheduling, such as DRMs and Ripple control	DI2	Digital input 2	6	–	–
	DI3	Digital input 3	7	–	–
	DI4	Digital input 4	8	–	–
	DI5	Digital input 5	9	–	–
For DRM0	DI1	Digital input 1	5	–	–
	GND	Signal GND	10	–	–
RS485–2, COM port used to access the grid side power sensor	PE	PE signal shielding ground	12	–	–
	485-B2	RS485 signal 2_B–	**13**	**6**	**9**
	485-A2	RS485 signal 2_A+	**14**	**5**	**10**
RS485-1, custom port. It can be used to connect to third-party EMS controllers, electricity meters or heat pump equipment, etc	PE	PE signal shielding ground	11	–	–
	485-A1	RS485 signal 1_A+	15	–	–
	485-B1	RS485 signal 1_B–	16	–	–

5.5.2 RS485 Signal Cable Connection

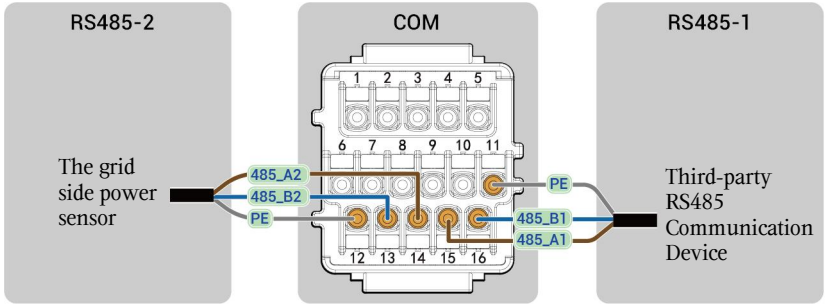

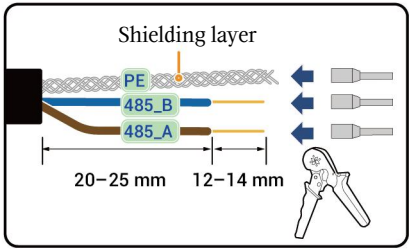

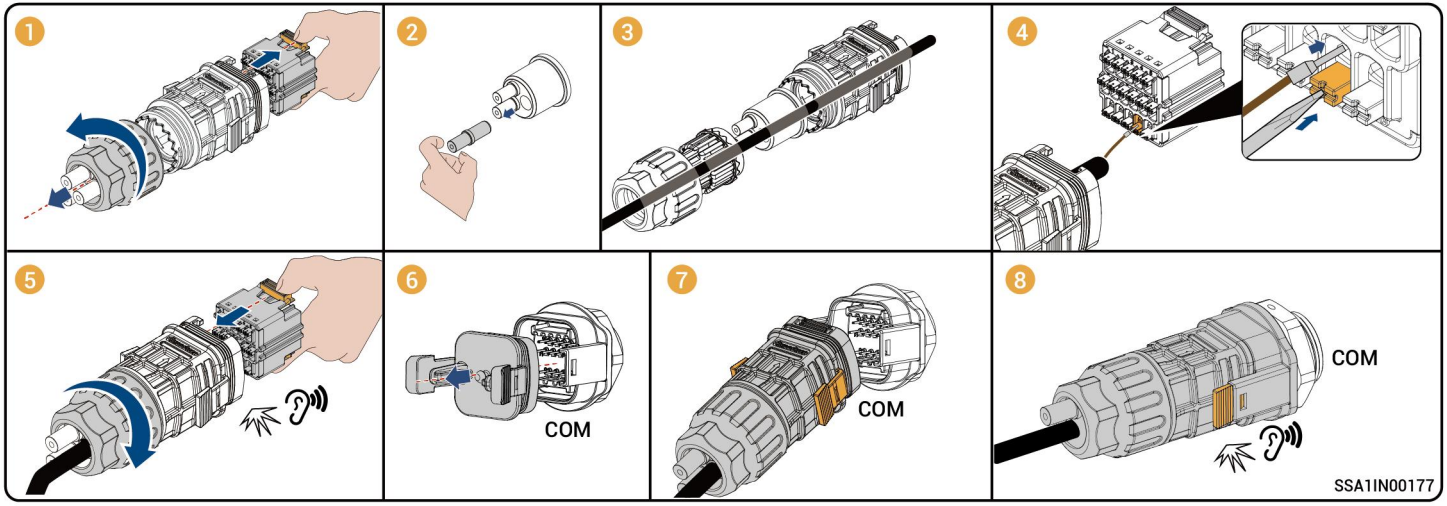

5.5.3 Demand Response Enabling Device (DRED) Connection

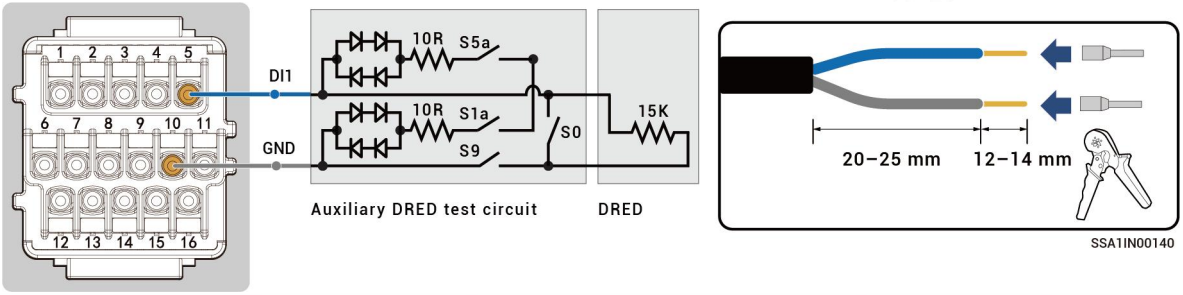

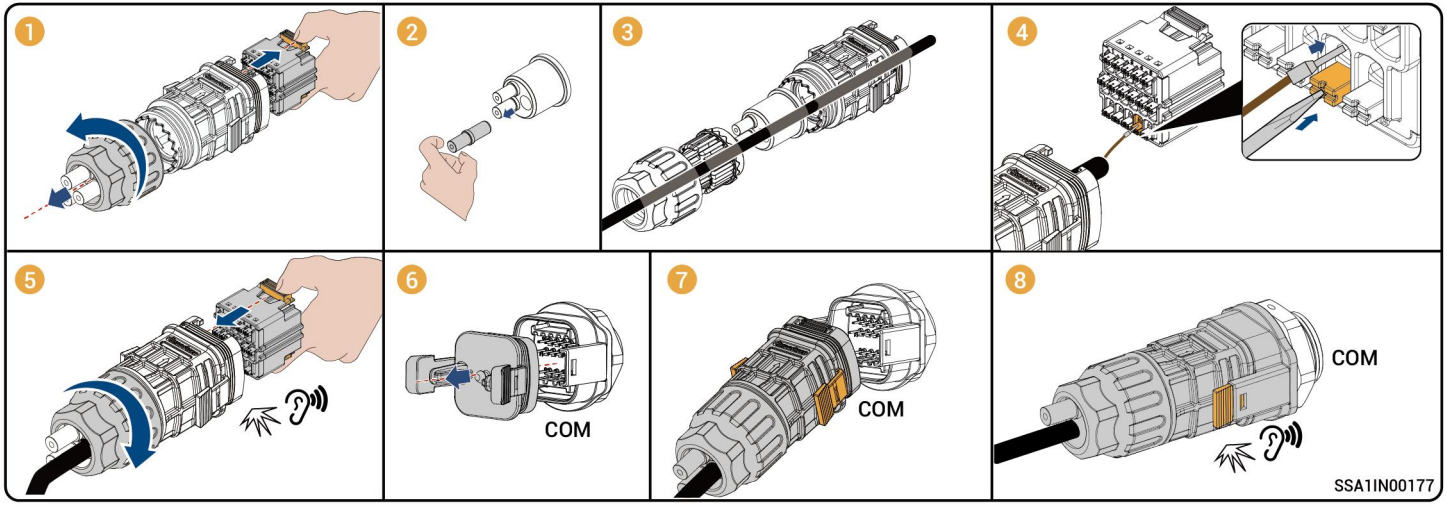

Tips

- Switches S5a, S1a, and S9 of DRED are normally closed and S0 is used to control the power on and off of SigenStor. When S0 closes, SigenStor is powered off, and when S0 opens, SigenStor is powered on.
- After creating new systems, you can use mySigen App to set DRM0 parameters. Please refer to mySigen App Installer Manual for detailed instructions.

5.6 DC input cable Connection

Tips

- Please make sure that the circuit breaker on the PV side is electrically neutral before connection.
- Please use the PV terminals supplied with the packing box. The use of terminals from other brands is not allowed, as mixing them poses risks.

Caution

- If the voltage is negative, the polarity is incorrect. Rectify the fault in time.
- Please select the PV strings according to the table.

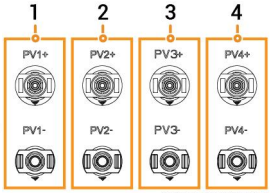

Product Model	PV string formation configuration
SigenStor-8S series	connected with 3 channels of strings (1, 2, 3)
SigenStor-(10S–12S) series	connected with 4 channels of strings (1, 2, 3, 4)

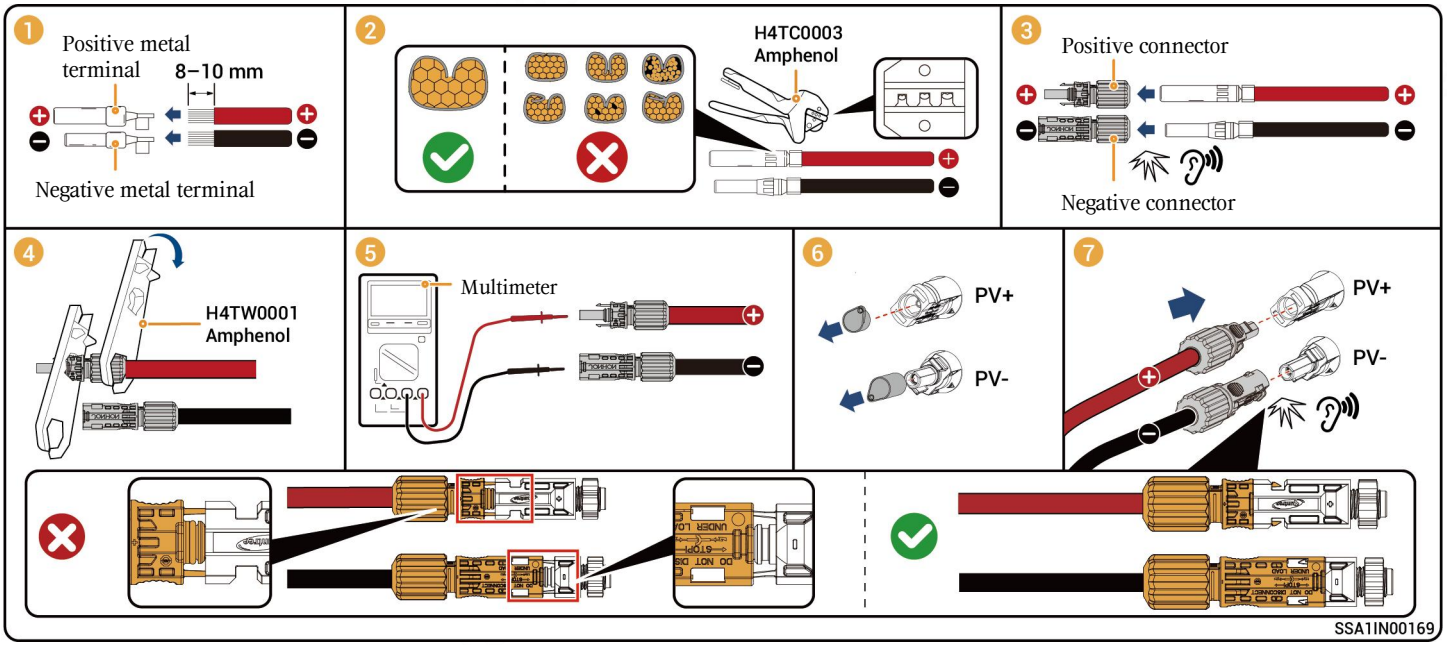

5.7 RJ45 Cable Connection

Tips

- RJ45 cables are EIA/TIA 568B standard cables.
- Two RJ45 Ethernet ports, one is connected to the router, and the other is connected to other equipment.(e.g., inverter, Gateway etc.)

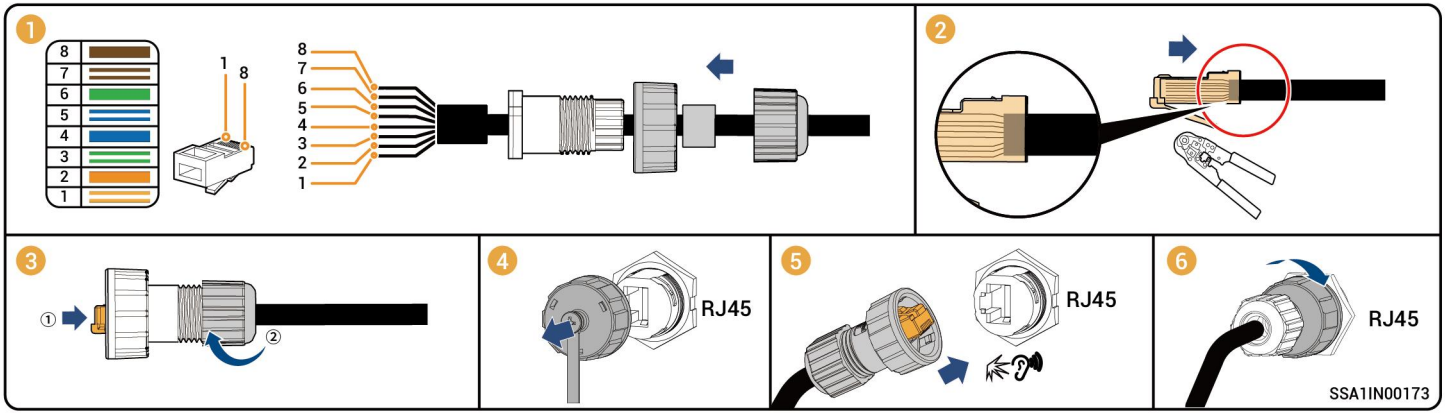

5.8 WLAN antenna stick Installation

Tips

- WLAN communication requires the installation of WLAN antenna stick.
- To ensure good communication, tighten the antenna rod up clockwise. The antenna rod is tightened up when it cannot be easily turned counterclockwise.

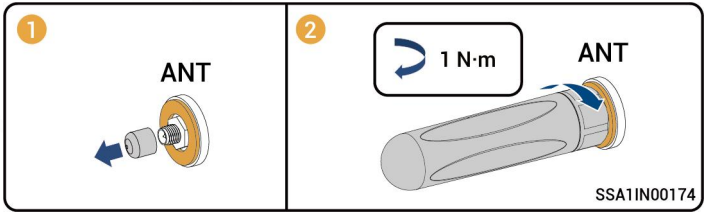

5.9 (Optional) Replacing SIM card of Sigen CommMod

Tips

- When free 4G traffic of CommMod runs out, users must replace an SIM card.
- Please replace the SIM card in Sigen CommMod with a SIM card of your country or region. Recommended data plan: ≥ 50 MB/month × N. (Wherein, N is the number of inverters)
- If you hear only one click sound when assembling Sigen CommMod in Step 3, complete the assembly on the other side.

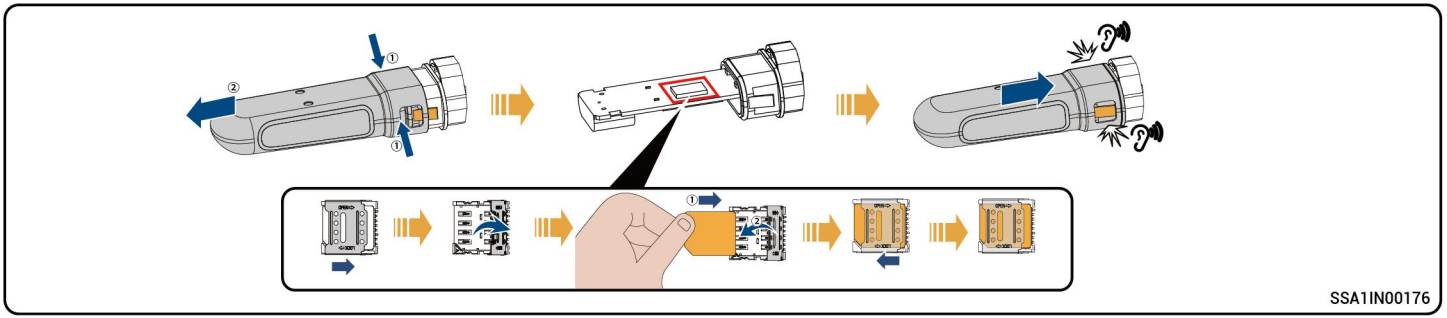

5.10 Sigen CommMod Installation

Tips

Sigen CommMod is required for 4G communication.

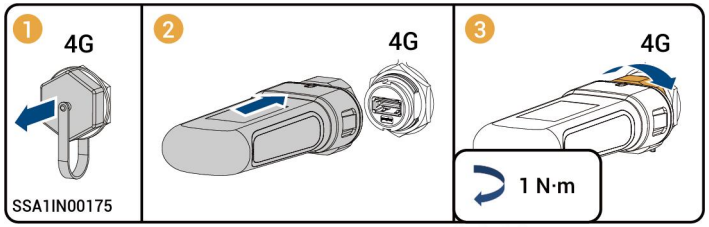

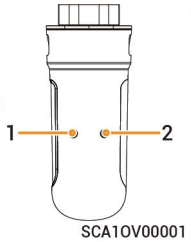

S/N	Indicator	Description
1	Power indicator	-
2	Network state indicator	• Slow flashing(200 ms on/1800 ms off): The network is being connected • Slow flashing(1800 ms on/200 ms off): Standby • Quick flashing(125 ms on/125 ms off): Data is being transferred

6 Post-installation Check

S/N	Check Item
1	The equipment has been securely installed.
2	Ground cables, DC cables, signal cables, etc. are installed accurately without leftovers.
3	The cable fastening screws or terminals are properly installed.
4	There are no sharp spikes or acute angles at the cut point of the cable tie.
5	DC SWICH is in the OFF state.
6	Ports that are not in use have waterproof covers or plugs installed.
7	There is no construction left inside or outside the equipment.

After confirmation, install the decorative covers.

7 Installation of the Decorative Cover

Without SigenStor EVDC Series

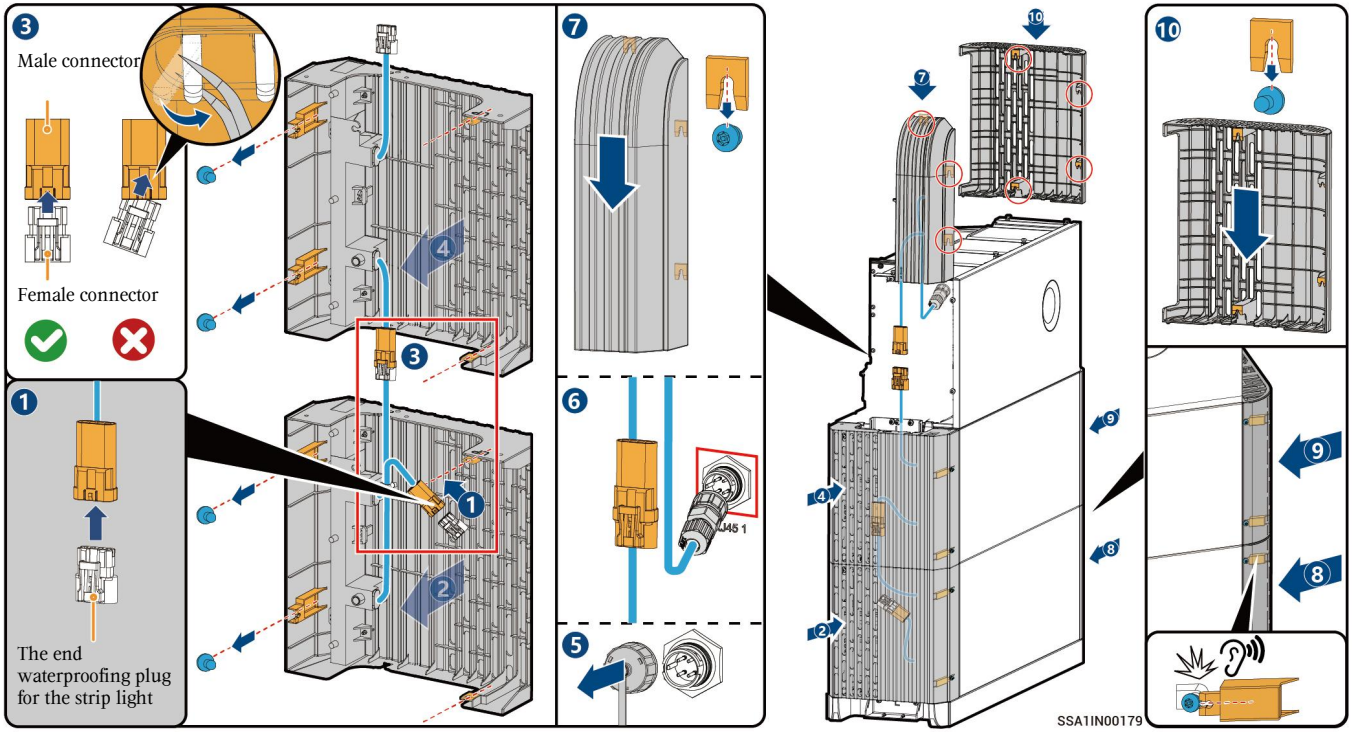

Caution

- The end waterproofing plug for the strip light in step 1 is at the lower end of the decoration on the left side of the inverter, please remove it for spare.
- If the strip light display is abnormal after the device is power-on, please check whether the pin in the male connector is tilted. If it is tilted, please correct it. And then to unplug and re-plug the male and female connectors at the abnormal location, or unplug and re-plug the terminals in the step 6 to r me operation.

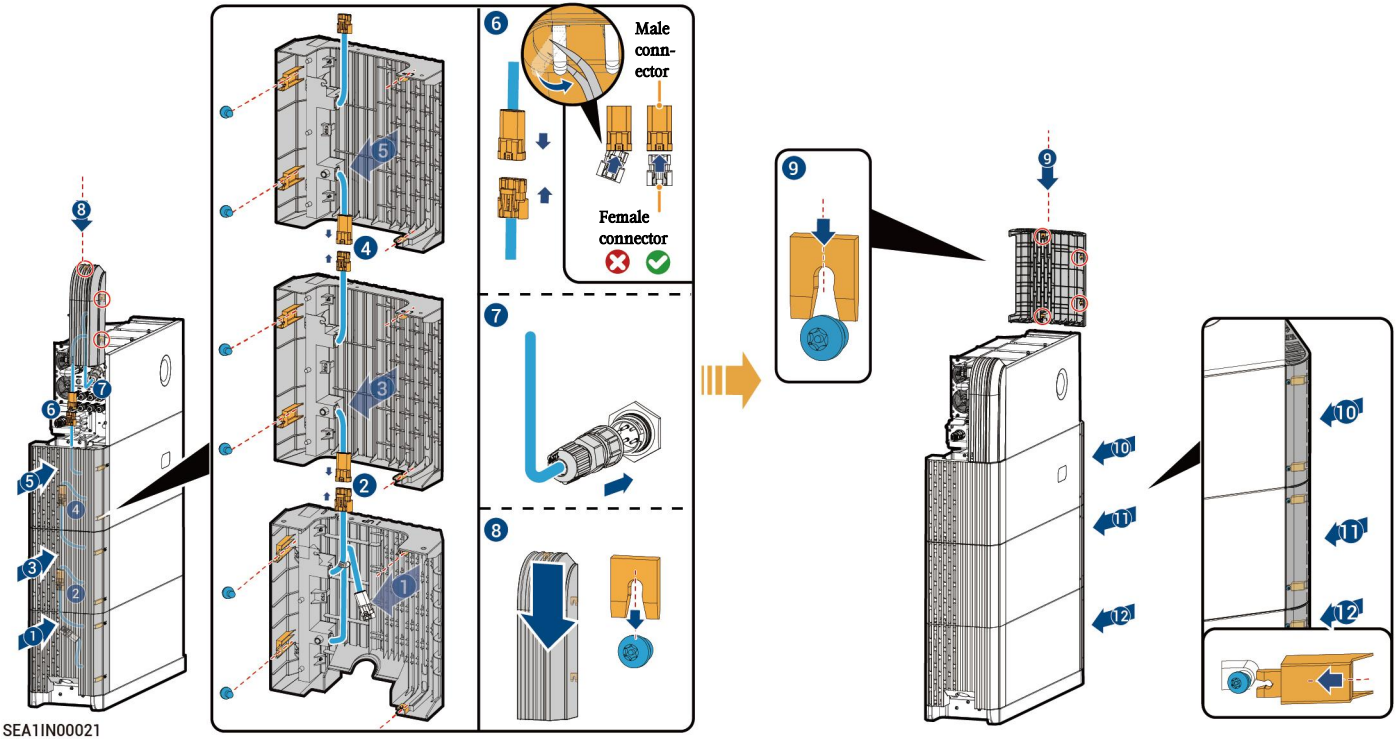

Caution

- The decorative cover used in step 1 is supplied with the SigenStor EVDC.
- If the strip light shows abnormal status when the equipment is powered on, check if the pins in the male connector is tilted. If tilted, straighten them out and then reconnect the corresponding male and female connectors, or reconnect the terminal in step 6 to resume normal operation.

8 Installation of Charging Socket and Placement of Charging Connector

For models with SigenStor EVDC series, follow the steps in this section. For models without SigenStor EVDC series, please disregard this.

1

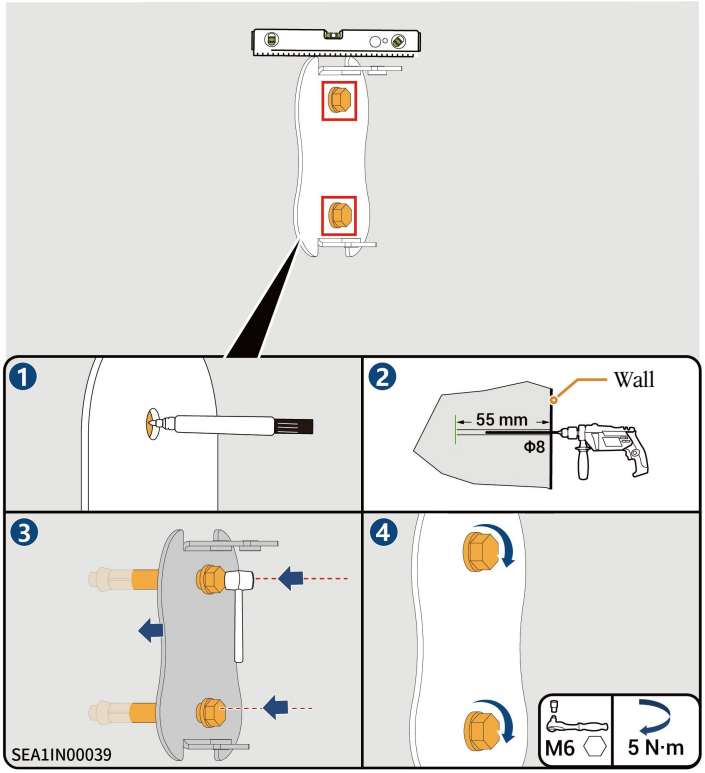

2

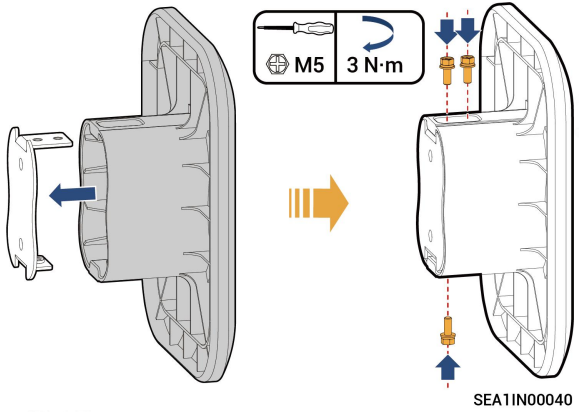

3

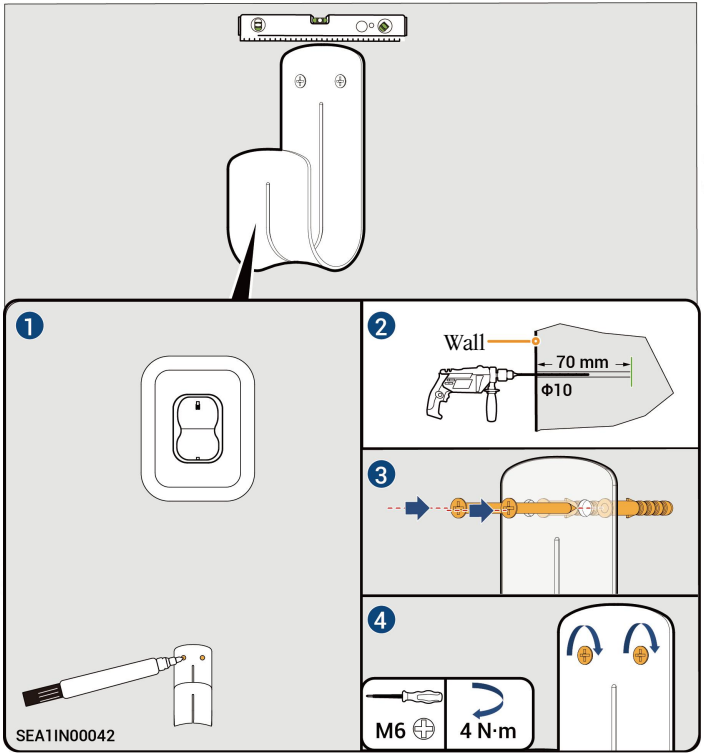

4

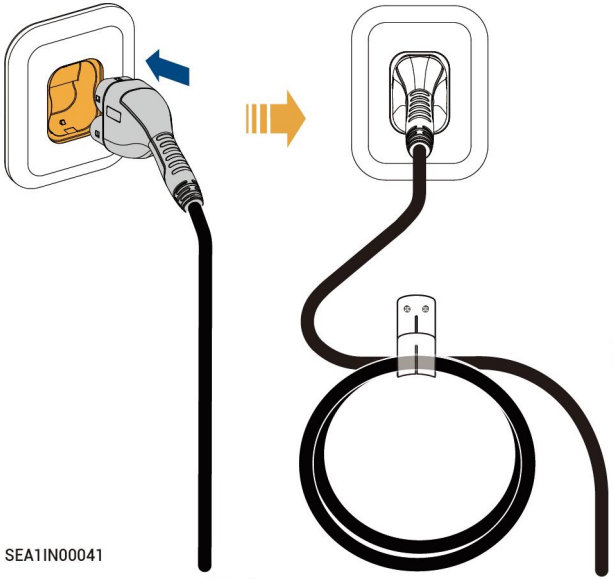

9 Equipment Power-On

1. Turn on the upstream switch of equipment.
2. Rotate DC SWITCH to ON.
3. Observe the indicators on the front side of the inverter to learn about the equipment status.

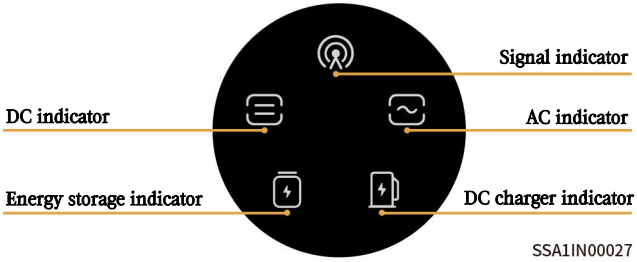

Indicator	Color	State	Description
		Always on	The DC side is connected but not running.
		Always on	The DC side is running.
		-	The DC side is not connected.
		Flash	The DC side is faulty.
		Always on	The inverter is faulty.
		Always on	The AC side is connected but not running.
		Always on	Grid-connected operation.
		Always on	Off-grid operation.
		-	The AC side is not connected.
		Flash	Off-grid overload operation.
		Flash	The AC side is faulty.
		Always on	The inverter is faulty.

Indicator	Color	State	Description
		Always on	All SigenStor BATs are connected but not running.
		Flash	SigenStor BAT is charging.
		Flash	SigenStor BAT is discharging.
		-	All SigenStor BATs lie dormant.
		Flash	Some SigenStor BATs are faulty.
		Always on	All SigenStor BATs are faulty.
		-	The management system is not connected.
		Flash	Connected to local App.
		Always on	Connected to the management system using an FE or WLAN.
		Always on	Connected to the management system over 4G.
		Flash	Insufficient traffic for Sigen CommMod.
		Off	Not powered on.
		Steady on	Powered on but the charging connector not connected to the vehicle.
		Steady on	• The charging connector connected to the vehicle. • Charging completed.
		Blink quickly	Charging starts, and the equipment is ready for charging[Note].
		Blink	Charging.
		Steady on	Alarming.
		Steady on	Equipment failure.

Note: After the user starts charging by swiping the card, setting the App, or bypassing authentication, wait for more than 30 s until a "beep" sound gives out. The equipment starts charging. If the user or vehicle actively stops charging or the equipment is malfunctioning during the wait period and four "beep" sounds give out, the charging process stops prematurely.

10 Download and create new system for mySigen APP

1 Please enter the “Partner" → “Register Now" at the Company's official website (https://www.sigenergy.com), and complete the account registration based on facts.

2 Download the mySigen App and create new system for the device.

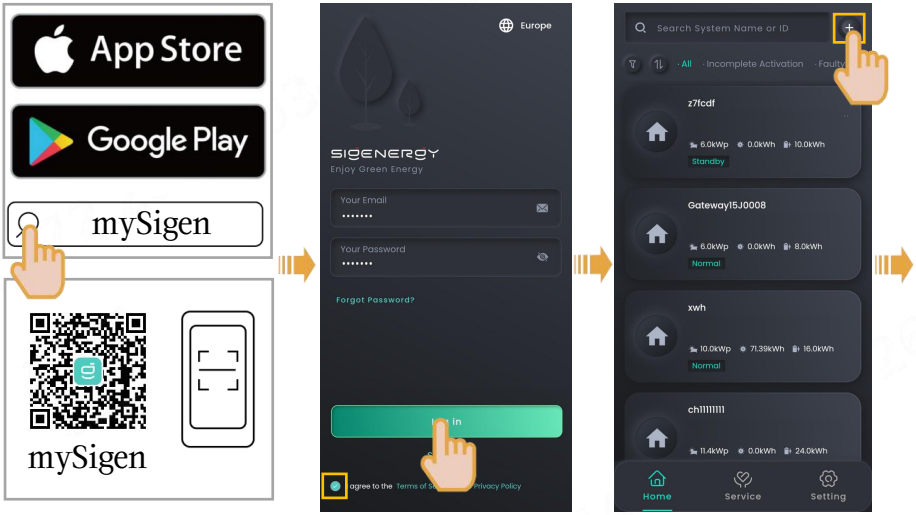

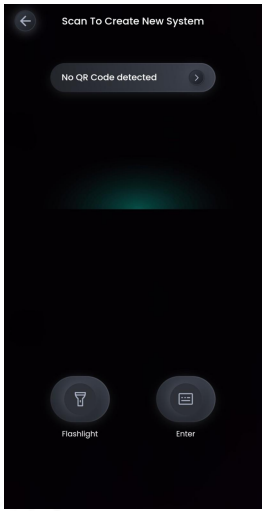

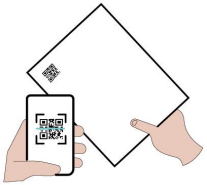

or

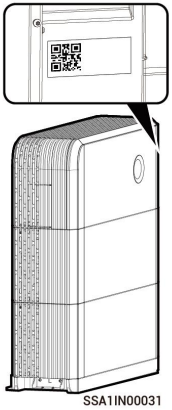

Scan the SN code label on the accompanying box material. If the SN is lost, scan the SN on the side of the inverter.

According to the interface prompts, complete the startup or refer to the "mySigen App Creating New Systems Guide" to obtain the operation method of startup.

3 Upon completion of the new system creation, the installer shall inform the owner to check its "sigencloud" e-mail within 24 hours and proceed with activating its account.

4 After create new system, install the remaining decorative covers.

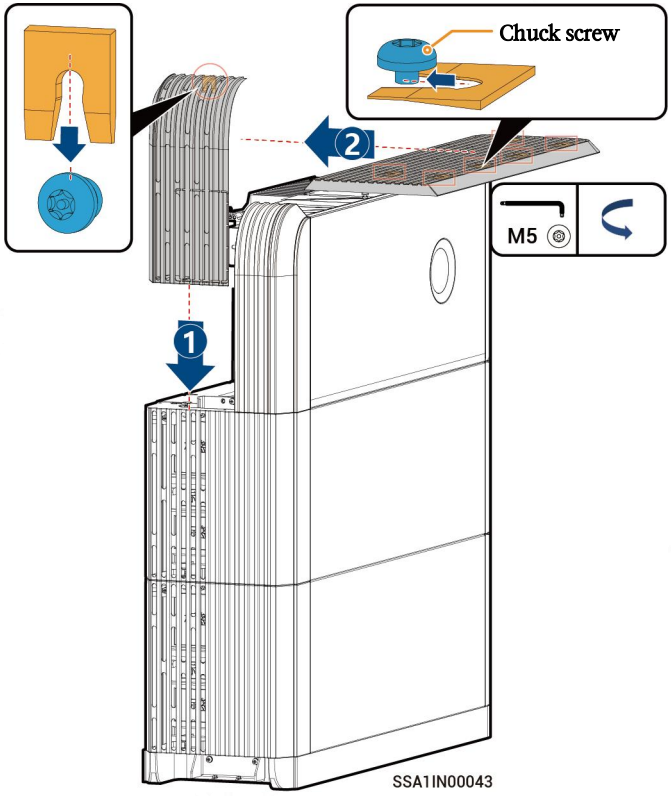

Sigenergy Technology Co., Ltd.

Website	LinkedIn	YouTube

www.sigenergy.com

Copyright © Sigenergy Technology Co., Ltd. 2025. All rights reserved.

Description in this document may contain predictive statements regarding financial and operating results, product portfolio, new technology, configurations and features of product. Several factors could cause difference between actual results and those expressed or implied in the predictive statements. Therefore, description in this document is provided for reference purpose only and constitutes neither an offer nor an acceptance. Sigenergy Technology Co., Ltd. may change the information at any time without notice.